# INTIMIDATOR
# BEAM 140SR
V2

## User Manual

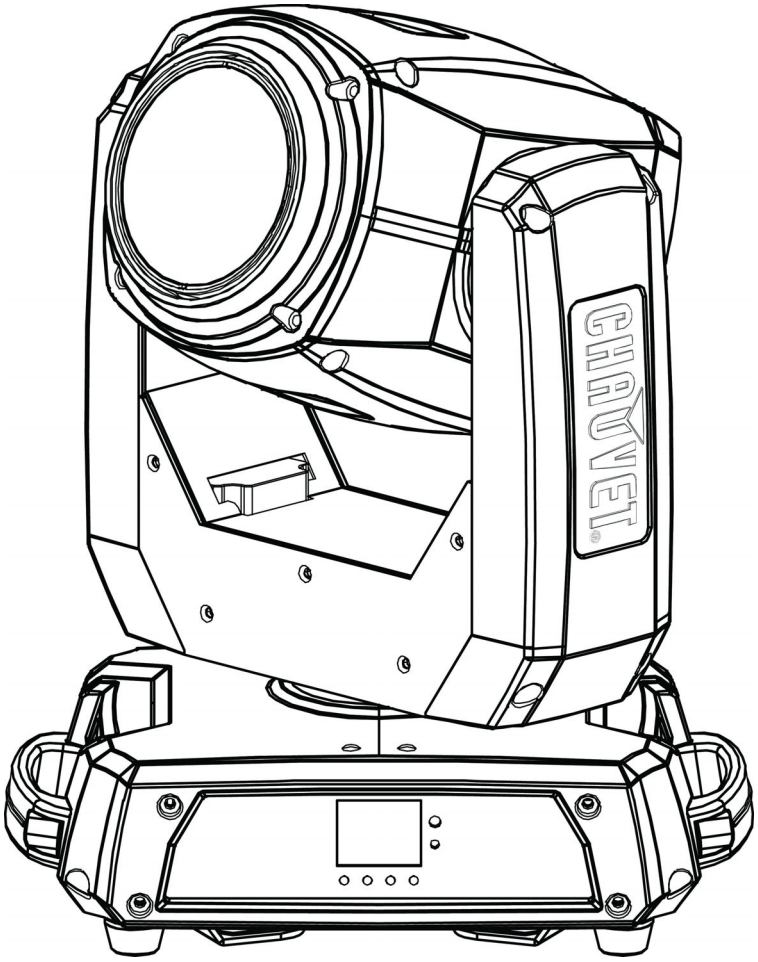


CHAUVET DJ

# TABLE OF CONTENTS


**1. Before You Begin** ..... 1
- What Is Included ..... 1
- Unpacking Instructions ..... 1
  - Claims ..... 1
- Text Conventions ..... 1
- Symbols ..... 1
- Disclaimer ..... 1
- Product at a Glance ..... 2
- Safety Notes ..... 2

**2. Introduction** ..... 3
- Product Overview ..... 3
- Product Dimensions ..... 3

**3. Setup** ..... 4
- AC Power ..... 4
  - Fuse Replacement ..... 4
  - Power Linking ..... 4
- Mounting ..... 5
  - Orientation ..... 5
  - Rigging ..... 5

**4. Operation** ..... 6
- Control Panel Operation ..... 6
- Menu Map ..... 6
- Configuration (DMX) ..... 8
  - Starting Address ..... 8
  - DMX Personalities ..... 8
- Gobos ..... 8
- DMX Channel Assignments and Values ..... 9
  - 14Ch ..... 9
  - 8Ch ..... 13
- Configuration (Standalone) ..... 15
  - Automatic Programs ..... 15
  - Sound-Active Mode ..... 15
  - Sound Sensitivity ..... 15
  - Manual Mode ..... 16
- Configuration (Settings) ..... 16
  - Pan Reverse ..... 16
  - Tilt Reverse ..... 16
  - Screen Reverse ..... 16
  - Pan Angle ..... 16
  - Tilt Angle ..... 17
  - Totem Mode ..... 17
  - Lamp Settings ..... 17
    - Manual Lamp Control ..... 17
    - Lamp State at Power On ..... 17
    - Lamp Control Via DMX ..... 18
    - On if DMX is On ..... 18
    - Off if DMX is Off ..... 18
    - Ignition Delay at Power On ..... 18
    - Low Power Delay with Shutter Closed ..... 19
    - Reset Lamp Timer ..... 19

Lamp Power ..... 19
Maintenance Timer ..... 19
Maintenance Timer Interval ..... 19
Reset Maintenance Timer ..... 20
Reset ..... 20
Factory Reset ..... 20
System Information ..... 20
IRC-6 Infrared Remote Control ..... 21
IRC-6 Operation ..... 21
Master/Slave Mode ..... 22
Zero Adjust Mode ..... 22
**5. Maintenance ..... 23**
Product Maintenance ..... 23
Lamp Replacement ..... 23
Procedure ..... 23
Maintaining Lamp Lifespan ..... 24
Lamp Adjustment ..... 24
**6. Technical Specifications ..... 25**
**Returns ..... 26**
**Contact Us ..... 27**

# 1. BEFORE YOU BEGIN

## What Is Included

- Intimidator Beam 140SR V2
- Power Cord
- Hanging Bracket with Mounting Hardware
- Quick Reference Guide

## Unpacking Instructions

Carefully unpack the product immediately and check the container to make sure all the parts are in the package and are in good condition.

### Claims

If the box or the contents (the product and included accessories) appear damaged from shipping, or show signs of mishandling, notify the carrier immediately, not Chauvet. Failure to report damage to the carrier immediately may invalidate your claim. In addition, keep the box and contents for inspection.

For other issues, such as missing components or parts, damage not related to shipping, or concealed damage, file a claim with Chauvet within 7 days of delivery.

## Text Conventions

| CONVENTION | MEANING |
|---|---|
| **1–512** | A range of values |
| **50/60** | A set of values of which only one can be chosen |
| **Settings** | A menu option not to be modified |
| **<ENTER>** | A key to be pressed on the product's control panel |
| **ON** | A value to be entered or selected |

## Symbols

| SYMBOL | MEANING |
|---|---|
| | Electrical warning. Not following these instructions may cause electrical damage to the product, accessories, or the user. |
| | Critical installation, configuration, or operation information. Not following these instructions may make the product not work, cause damage to the product, or cause harm to the operator. |
| | Important installation or configuration information. The product may not function correctly if this information is not used. |
| | Useful information. |

## Disclaimer

Chauvet believes that the information contained in this manual is accurate in all respects. However, Chauvet assumes no responsibility and specifically disclaims any and all liability to any party for any loss, damage or disruption caused by any errors or omissions in this document, whether such errors or omissions result from negligence, accident or any other cause. Chauvet reserves the right to revise the content of this document without any obligation to notify any person or company of such revision, however, Chauvet has no obligation to make, and does not commit to make, any such revisions. Download the latest version from www.chauvetdj.com.

## Intellectual Property

The works of authorship contained in this manual, including, but not limited to, all design, text and images are owned by Chauvet.

**© Copyright 2020 Chauvet & Sons, LLC. All rights reserved.**

Electronically published by Chauvet in the United States of America.

CHAUVET, the Chauvet logo, and Intimidator Beam 140SR V2 are registered trademarks or trademarks of Chauvet & Sons LLC (d/b/a Chauvet and Chauvet Lighting) in the United States and other countries. Other company and product names and logos referred to herein may be trademarks of their respective companies.

## Safety Notes

- Always connect the product to a grounded circuit to avoid the risk of electrocution.
- Always disconnect the product from the power source before cleaning or replacing the fuse.
- Avoid direct eye exposure to the light source while the product is on.
- Make sure the power cord is not crimped or damaged.
- Never disconnect the product from power cord by pulling or tugging on the cord.
- If mounting the product overhead, always secure to a fastening device using a safety cable.
- Make sure there are no flammable materials close to the product when operating.
- Do not touch the product's housing when operating because it may be very hot.

- Always make sure that the voltage of the outlet to which you are connecting the product is within the range stated on the decal or rear panel of the product.
- The product is for indoor use only! (IP20) To prevent risk of fire or shock, do not expose the product to rain or moisture.
- Always install the product in a location with adequate ventilation, at least 20 in (50 cm) from adjacent surfaces.
- Be sure that no ventilation slots on the product's housing are blocked.
- Never connect the product to a dimmer.
- Make sure to replace the fuse with another of the same type and rating.
- Never carry the product from the power cord or any moving part. Always use the hanging/ mounting bracket.
- The maximum ambient temperature (Ta) is 104 °F (40 °C). Do not operate the product at higher temperatures.
- In the event of a serious operating problem, stop using the product immediately.
- Never try to repair the product. Repairs carried out by unskilled people can lead to damage or malfunction. Please contact the nearest authorized technical assistance center.
- To eliminate unnecessary wear and improve its lifespan, during periods of non-use completely disconnect the product from power via breaker or by unplugging it.

Keep this User Manual for future use. If you sell the product to someone else, be sure that they also receive this document.

# 2. INTRODUCTION

## Product Overview

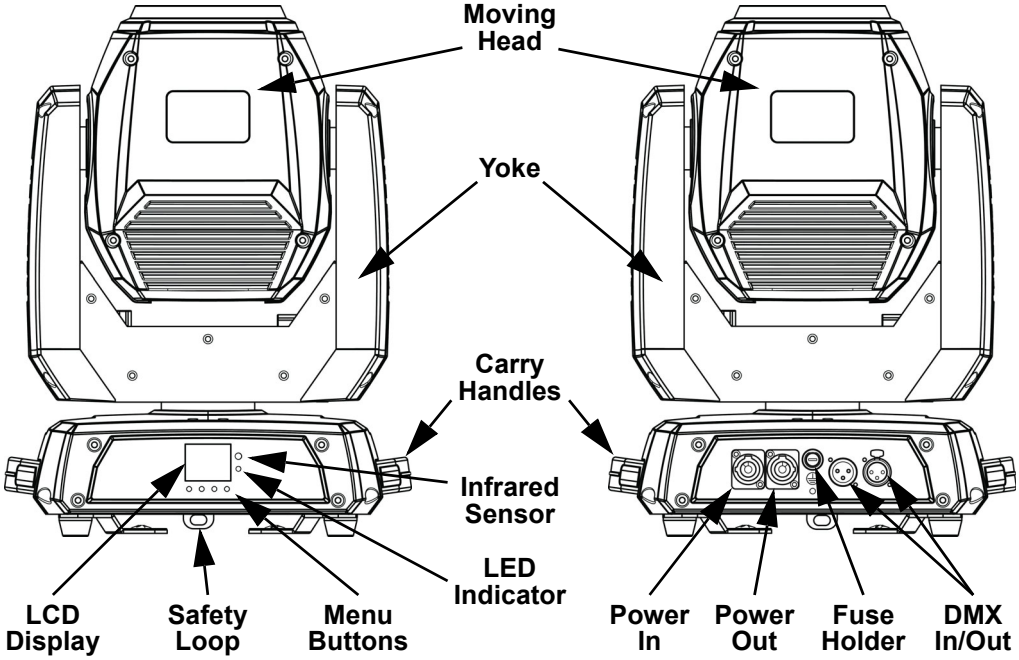


## Product Dimensions

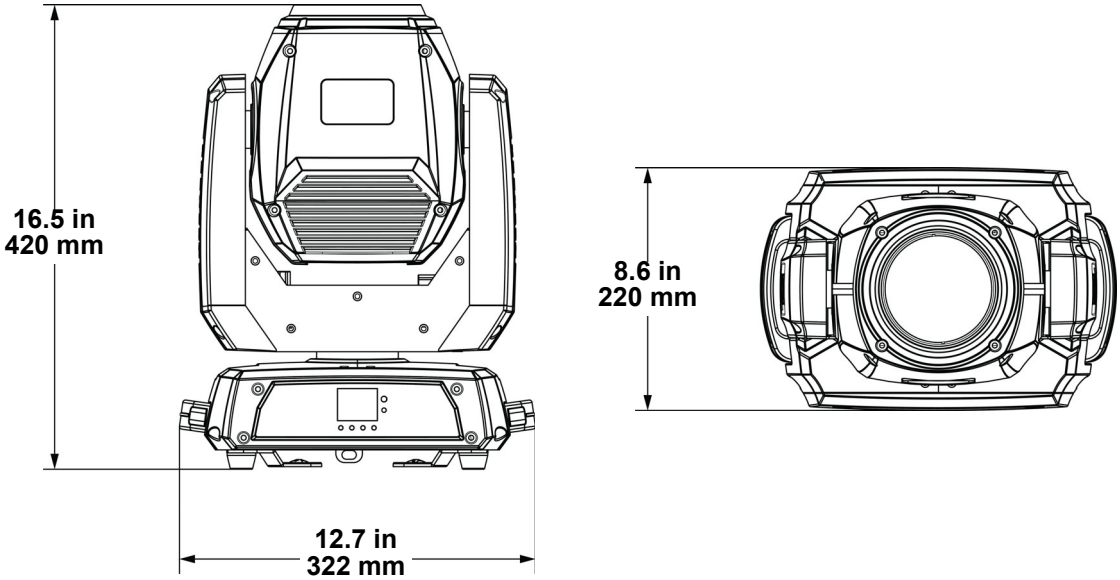

# 3. SETUP

## AC Power

The Intimidator Beam 140SR V2 has an auto-ranging power supply and it can work with an input voltage range of 100 to 240 VAC, 50/60 Hz. To determine the product's power requirements (circuit breaker, power outlet, and wiring), use the current value listed on the label affixed to the product's back panel, or refer to the product's specifications chart. The listed current rating indicates the product's average current draw under normal conditions.

- **Always connect the product to a protected circuit (a circuit breaker or fuse). Make sure the product has an appropriate electrical ground to avoid the risk of electrocution or fire.**
- **To eliminate unnecessary wear and improve its lifespan, during periods of non-use completely disconnect the product from power via breaker or by unplugging it.**

**Never connect the product to a rheostat (variable resistor) or dimmer circuit, even if the rheostat or dimmer channel serves only as a 0 to 100% switch.**

## Fuse Replacement

1. Disconnect the product from power.
2. Using a flat-head screwdriver, unscrew the fuse holder cap from the housing.
3. Remove the blown fuse.
4. Replace with a fuse of the same type and rating.
5. Screw the fuse holder cap back in place and reconnect power.

**Disconnect the product from the power outlet before replacing the fuse.**

## Power Linking

The product provides power linking via the powerCON®-compatible outlet located in the back of the product. Please see the diagram below for further explanation.

**Power Linking Diagram**

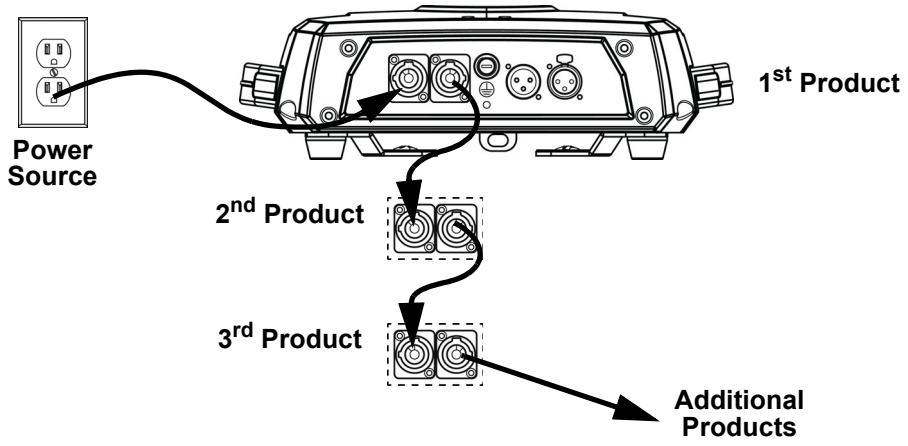


**You can power link up to 3 Intimidator Beam 140SR V2 products on 120 VAC or up to 6 Intimidator Beam 140SR V2 products on 230 VAC.**

- **The power linking diagram corresponds to the North American version of the product ONLY! If using the product in other markets, you must consult with the local Chauvet distributor as power linking connectors and requirements may differ in your country or region.**
- **Warning! When power linking this product, lamp ignitions must be offset to avoid high inrush currents. The ignition delay of the first product in a power linking chain must be set to no less than five seconds. The ignition delay of each subsequent product in the chain must be at least five seconds more than the previous product.**

# Mounting

Before mounting the product, read and follow the safety recommendations indicated in the Safety Notes.

## Orientation

The Intimidator Beam 140SR V2 may be mounted in any position; however, make sure adequate ventilation is provided around the product.

## Rigging

- Before deciding on a location, always make sure there is easy access to the product for maintenance and programming purposes.
- Make sure adequate ventilation is provided around the product.
- Make sure that the structure or surface onto which you are mounting the product can support the product's weight. (see the Technical Specifications)
- When mounting the product overhead, always use a safety cable. Mount the product securely to a rigging point, whether an elevated platform or a truss.
- When rigging the product onto a truss, use a mounting clamp of appropriate weight capacity.
- When power linking multiple products, mount the products close enough for power linking cables to reach.
- The bracket adjustment knobs allow for directional adjustment when aiming the product to the desired angle. Only loosen or tighten the bracket knobs manually. Using tools could damage the knobs.
- The rubber feet also serve as floor supports. When mounting the product on the floor, make sure that the product and cables are away from people and vehicles.

**Mounting Diagram**

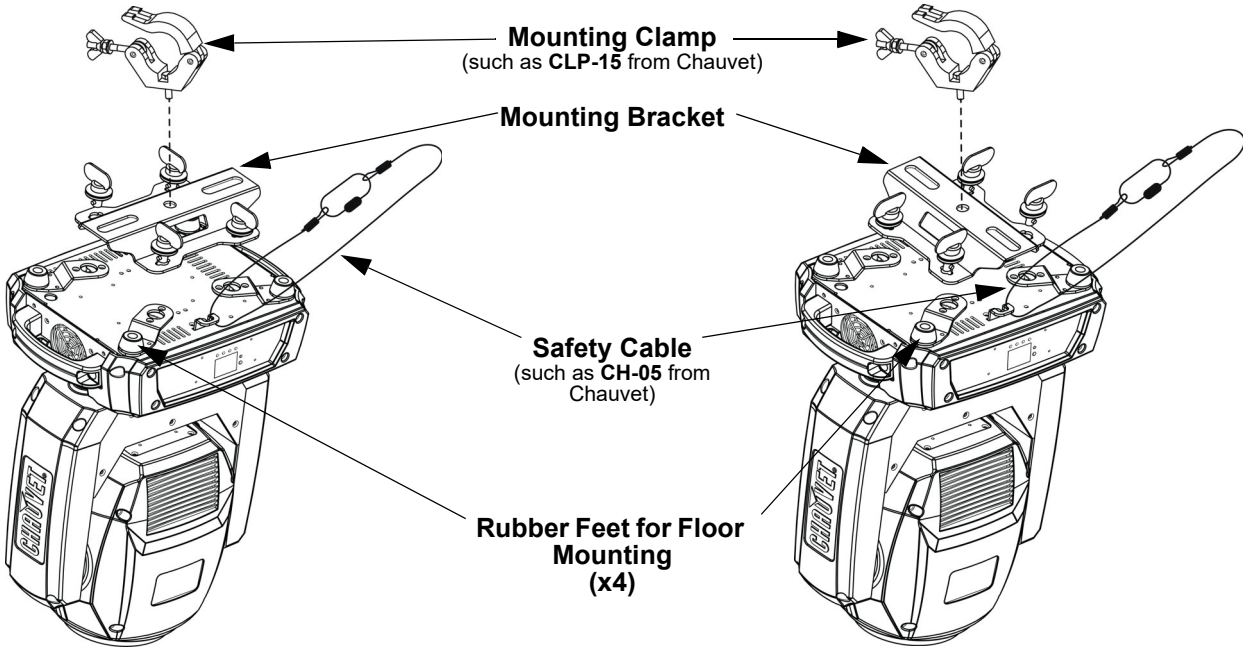


**When using one mounting clamp with this fixture, use a clamp with a captive bolt to prevent accidental loosening.**

# 4. OPERATION

## Control Panel Operation

To access the control panel functions, use the four buttons located underneath the display. Please refer to the Product Overview to see the button locations on the control panel.

| BUTTON | FUNCTION |
|---|---|
| **<MENU>** | Press to find an operation mode or to back out of the current menu option |
| **<UP>** | Press to scroll up the list of options or to find a higher value |
| **<DOWN>** | Press to scroll down the list of options or to find a lower value |
| **<ENTER>** | Press to activate a menu option or a selected value |

## Menu Map

Refer to the Intimidator Beam 140SR V2 product page on www.chauvetdj.com for the latest menu map.

| MAIN LEVEL | PROGRAMMING LEVELS | | | DESCRIPTION |
|---|---|---|---|---|
| **Address** | **001–512** | | | Sets the DMX starting address |
| **Run Mode** | **DMX** | **14CH** | | Selects DMX mode |
| | | **08CH** | | |
| | **Slave** | **Slave1–4** | | Selects Slave mode 1, 2, 3, or 4 |
| | **Auto** | | | Selects Auto mode |
| | **Sound** | | | Selects Sound mode |
| | **IR** | | | Selects infrared control |
| | **Manual** | **Pan** | **000–255** | 0–540° |
| | | **Tilt** | | 0–270° |
| | | **Color** | | Selects color options |
| | | **Gobo** | | Selects gobo options |
| | | **Prism** | | Selects 16-facet prism, and rotation effect |
| | | **Focus** | | Manual focus control |
| | | **Frost** | | Selects frost effect |
| | | **Dimmer** | | Sets dimmer value |
| | | **Shutter** | | Sets shutter value and strobe effect |
| **Setup** | **Pan Reverse** | | **OFF** | Normal pan operation |
| | | | **ON** | Reverse pan operation |
| | **Tilt Reverse** | | **OFF** | Normal tilt operation |
| | | | **ON** | Reverse tilt operation |
| | **Screen Reverse** | | **OFF** | Normal display |
| | | | **ON** | Reverse display |
| | **Pan Angle** | | **540** | Selects the 540° pan angle range |
| | | | **360** | Selects the 360° pan angle range |
| | | | **180** | Selects the 180° pan angle range |
| | **Tilt Angle** | | **270** | Selects the 270° tilt angle range |
| | | | **180** | Selects the 180° tilt angle range |
| | | | **90** | Selects the 90° tilt angle range |
| | **Totem Mode** | | **OFF** | Does not restrict the pan and tilt motion |
| | | | **UP** | Restricts the pan and tilt motion for overhead mounting |
| | | | **DOWN** | Restricts the pan and tilt motion for surface/floor mounting |

| MAIN LEVEL | PROGRAMMING LEVELS | | | DESCRIPTION |
|---|---|---|---|---|
| Setup (cont.) | Lamp Setting | On/Off | OFF | Turns lamp on/off |
| | | | ON | |
| | | State/Power On | OFF | Defines the status of lamp when powering up product |
| | | | ON | |
| | | Off Via DMX | NO | Enables lamp control through DMX |
| | | | YES | |
| | | On If DMX On | NO | Turns lamp on if DMX signal is detected |
| | | | YES | |
| | | Off If DMX Off | NO | Turns lamp off when DMX signal is lost |
| | | | YES | |
| | | Ignition Delay | 000–255 | Defines number of seconds after product powers on before lamp turns on |
| | | Low Power Delay | 000–255 | Selects duration of delay between shutter closing and lamp entering low power mode |
| | | Reset Lamp Timer | NO | Resets lamp timer (for when lamp is replaced) |
| | | | YES | |
| | | Lamp Power | 132 | Select if installed lamp is 132 W Osram HRI |
| | | | 140 | Select if installed lamp is 140 W Osram HRI |
| | Special Set | Interval | 10–250 | Defines number of hours between maintenance |
| | | Remain Time | NO | Resets maintenance timer |
| | | | RESET | |
| | Sensitivity | | 001–100 | Sets sound sensitivity |
| | Reset | | | Resets the product |
| | Factory Set | | | Loads factory defaults |
| Sys Info | Ver: | | V_ | Displays the software version |
| | Running Mode | | _ _ _ _ _ _ _ | Displays the current running mode |
| | DMX Address | | _ _ _ | Displays the current DMX address |
| | Lamp On Time | | _ _ _ _ _ | Displays how long the lamp has been running |
| | Remain Time | | _ _ _ _ _ | Displays time remaining in maintenance cycle |

## Configuration (DMX)

The Intimidator Beam 140SR V2 works with a DMX controller. Information about DMX is in the CHAUVET DMX Primer, which is available from the Chauvet website http://www.chauvetlighting.com/downloads/

### Starting Address

When selecting a starting DMX address, always consider the number of DMX channels the selected DMX mode uses. If you choose a starting address that is too high, you could restrict the access to some of the product's channels.

The Intimidator Beam 140SR V2 uses up to 14 DMX channels, which defines the highest configurable address to **499**.

If you are not familiar with the DMX protocol, download the DMX Primer from www.chauvetdj.com.

To select the starting address, do the following:

1. Press **<MENU>**.
2. Use **<UP>** or **<DOWN>** to select **Address**.
3. Press **<ENTER>**.
4. Use **<UP>** or **<DOWN>** to select the starting address, from **001–512**.
5. Press **<ENTER>**.

### DMX Personalities

The Intimidator Beam 140SR V2 has two DMX personalities, a 14-channel personality, and an 8-channel personality.

To choose which DMX personality to use, follow the steps below:

1. Press **<MENU>**.
2. Use **<UP>** or **<DOWN>** to select **Run Mode**.
3. Press **<ENTER>**.
4. Use **<UP>** or **<DOWN>** to select **DMX**.
5. Press **<ENTER>**.
6. Use **<UP>** or **<DOWN>** to select the DMX personality, from **14CH** or **8CH**.
7. Press **<ENTER>**.

## Gobos

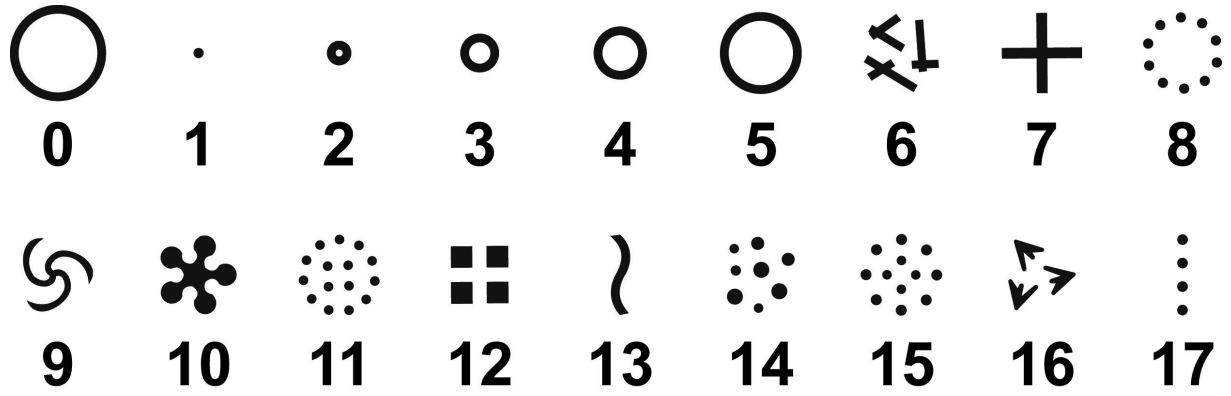

# DMX Channel Assignments and Values

## 14Ch

| CHANNEL | FUNCTION | VALUE | PERCENT/SETTING |
|---|---|---|---|
| 1 | **Pan** | 000 ⇔ 255 | 0–540° |
| 2 | **Pan Fine** | 000 ⇔ 255 | Fine control of panning |
| 3 | **Tilt** | 000 ⇔ 255 | 0–270° |
| 4 | **Tilt Fine** | 000 ⇔ 255 | Fine control of tilting |
| 5 | **Pan/Tilt Speed** | 000 ⇔ 255 | Pan/Tilt speed, fast to slow |
| 6 | **Color Wheel** | 000 ⇔ 003 | White |
| | | 004 ⇔ 007 | Red |
| | | 008 ⇔ 011 | Yellow |
| | | 012 ⇔ 015 | Sky Blue |
| | | 016 ⇔ 019 | Green |
| | | 020 ⇔ 023 | Lime Green |
| | | 024 ⇔ 027 | Natural White |
| | | 028 ⇔ 031 | Lavender |
| | | 032 ⇔ 035 | Canary Yellow |
| | | 036 ⇔ 039 | Magenta |
| | | 040 ⇔ 043 | Cyan |
| | | 044 ⇔ 047 | Warm White |
| | | 048 ⇔ 051 | Lilac |
| | | 052 ⇔ 055 | Pale Blue |
| | | 056 ⇔ 063 | Ultraviolet |
| | | 064 ⇔ 067 | White / Red |
| | | 068 ⇔ 071 | Red / Yellow |
| | | 072 ⇔ 075 | Yellow / Sky Blue |
| | | 076 ⇔ 079 | Sky Blue / Green |
| | | 080 ⇔ 083 | Green / Lime Green |
| | | 084 ⇔ 087 | Lime Green / Natural White |
| | | 088 ⇔ 091 | Natural White / Lavender |
| | | 092 ⇔ 095 | Lavender / Canary Yellow |
| | | 096 ⇔ 099 | Canary Yellow / Magenta |
| | | 100 ⇔ 103 | Magenta / Cyan |
| | | 104 ⇔ 107 | Cyan / Warm White |
| | | 108 ⇔ 111 | Warm White / Lilac |
| | | 112 ⇔ 115 | Lilac / Pale Blue |
| | | 116 ⇔ 119 | Pale Blue / Ultraviolet |
| | | 120 ⇔ 127 | Ultraviolet / White |
| | | 128 ⇔ 191 | Color cycling rainbow, slow to fast |
| | | 192 ⇔ 255 | Reverse color cycling rainbow, slow to fast |

**14Ch** (cont.)

| CHANNEL | FUNCTION | VALUE | PERCENT/SETTING |
|---|---|---|---|
| 7 | **Gobo Wheel** (see Gobos) | 000 ⇔ 003 | Open |
| | | 004 ⇔ 007 | Gobo 1 |
| | | 008 ⇔ 011 | Gobo 2 |
| | | 012 ⇔ 015 | Gobo 3 |
| | | 016 ⇔ 019 | Gobo 4 |
| | | 020 ⇔ 023 | Gobo 5 |
| | | 024 ⇔ 027 | Gobo 6 |
| | | 028 ⇔ 031 | Gobo 7 |
| | | 032 ⇔ 035 | Gobo 8 |
| | | 036 ⇔ 039 | Gobo 9 |
| | | 040 ⇔ 043 | Gobo 10 |
| | | 044 ⇔ 047 | Gobo 11 |
| | | 048 ⇔ 051 | Gobo 12 |
| | | 052 ⇔ 055 | Gobo 13 |
| | | 056 ⇔ 059 | Gobo 14 |
| | | 060 ⇔ 063 | Gobo 15 |
| | | 064 ⇔ 067 | Gobo 16 |
| | | 068 ⇔ 071 | Gobo 17 |
| | | 072 ⇔ 075 | Gobo 17 shake, slow to fast |
| | | 076 ⇔ 079 | Gobo 16 shake, slow to fast |
| | | 080 ⇔ 083 | Gobo 15 shake, slow to fast |
| | | 084 ⇔ 087 | Gobo 14 shake, slow to fast |
| | | 088 ⇔ 091 | Gobo 13 shake, slow to fast |
| | | 092 ⇔ 095 | Gobo 12 shake, slow to fast |
| | | 096 ⇔ 099 | Gobo 11 shake, slow to fast |
| | | 100 ⇔ 103 | Gobo 10 shake, slow to fast |
| | | 104 ⇔ 107 | Gobo 9 shake, slow to fast |
| | | 108 ⇔ 111 | Gobo 8 shake, slow to fast |
| | | 112 ⇔ 115 | Gobo 7 shake, slow to fast |
| | | 116 ⇔ 119 | Gobo 6 shake, slow to fast |
| | | 120 ⇔ 123 | Gobo 5 shake, slow to fast |
| | | 124 ⇔ 127 | Gobo 4 shake, slow to fast |
| | | 128 ⇔ 131 | Gobo 3 shake, slow to fast |
| | | 132 ⇔ 135 | Gobo 2 shake, slow to fast |
| | | 136 ⇔ 139 | Gobo 1 shake, slow to fast |
| | | 140 ⇔ 143 | Open |
| | | 144 ⇔ 199 | Cycle effect, slow to fast |
| | | 200 ⇔ 255 | Reverse cycle effect, slow to fast |
| 8 | **Prism** | 000 ⇔ 007 | No function |
| | | 008 ⇔ 012 | Prism |
| | | 013 ⇔ 130 | Rotation, slow to fast |
| | | 131 ⇔ 247 | Reverse rotation, slow to fast |
| | | 248 ⇔ 255 | Prism |
| 9 | **Focus** | 000 ⇔ 255 | Focus, big to small |

**14Ch** (cont.)

| CHANNEL | FUNCTION | VALUE | PERCENT/SETTING |
|---|---|---|---|
| **10** | **Dimmer** | 000 ⇨ 255 | 0–100% |
| **11** | **Shutter** | 000 ⇨ 007 | Closed |
| | | 008 ⇨ 015 | Open |
| | | 016 ⇨ 131 | Strobe, slow to fast |
| | | 132 ⇨ 167 | Slow open, fast close, slow to fast |
| | | 168 ⇨ 203 | Fast open, slow close, slow to fast |
| | | 204 ⇨ 239 | Pulse strobe, slow to fast |
| | | 240 ⇨ 247 | Random strobe, slow to fast |
| | | 248 ⇨ 255 | Open |
| **12** | **Frost** | 000 ⇨ 255 | 0–100% |
| **13** | **Function** | 000 ⇨ 007 | No function |
| | | 008 ⇨ 015 | Blackout on pan/tilt movement |
| | | 016 ⇨ 023 | Blackout on color wheel movement |
| | | 024 ⇨ 031 | Blackout on gobo wheel movement |
| | | 032 ⇨ 039 | Blackout on pan/tilt/color wheel movement |
| | | 040 ⇨ 047 | Blackout on pan/tilt/gobo wheel movement |
| | | 048 ⇨ 055 | Blackout on pan/tilt/color/gobo wheel movement |
| | | 056 ⇨ 087 | No function |
| | | 088 ⇨ 095 | Lamp On |
| | | 096 ⇨ 103 | Pan reset |
| | | 104 ⇨ 111 | Tilt reset |
| | | 112 ⇨ 119 | Color wheel reset |
| | | 120 ⇨ 127 | Gobo wheel reset |
| | | 128 ⇨ 135 | Frost reset |
| | | 136 ⇨ 143 | Prism reset |
| | | 144 ⇨ 151 | Focus reset |
| | | 152 ⇨ 159 | All reset |
| | | 160 ⇨ 167 | Shutter reset |
| | | 168 ⇨ 231 | No function |
| | | 232 ⇨ 239 | Lamp Off |
| | | 240 ⇨ 255 | No function |

**14Ch** (cont.)

| CHANNEL | FUNCTION | VALUE | PERCENT/SETTING |
|---|---|---|---|
| 14 | **Movement Macros** | 000 ⇨ 007 | No function |
| | | 008 ⇨ 023 | Movement macro 1 |
| | | 024 ⇨ 039 | Movement macro 2 |
| | | 040 ⇨ 055 | Movement macro 3 |
| | | 056 ⇨ 071 | Movement macro 4 |
| | | 072 ⇨ 087 | Movement macro 5 |
| | | 088 ⇨ 103 | Movement macro 6 |
| | | 104 ⇨ 119 | Movement macro 7 |
| | | 120 ⇨ 135 | Movement macro 8 |
| | | 136 ⇨ 151 | Sound-active movement macro 1 |
| | | 152 ⇨ 167 | Sound-active movement macro 2 |
| | | 168 ⇨ 183 | Sound-active movement macro 3 |
| | | 184 ⇨ 199 | Sound-active movement macro 4 |
| | | 200 ⇨ 215 | Sound-active movement macro 5 |
| | | 216 ⇨ 231 | Sound-active movement macro 6 |
| | | 232 ⇨ 247 | Sound-active movement macro 7 |
| | | 248 ⇨ 255 | Sound-active movement macro 8 |

## 8Ch

| CHANNEL | FUNCTION | VALUE | PERCENT/SETTING |
|---|---|---|---|
| 1 | **Pan** | 000 ⇔ 255 | 0–540° |
| 2 | **Tilt** | 000 ⇔ 255 | 0–270° |
| 3 | **Color Wheel** | 000 ⇔ 003 | White |
| | | 004 ⇔ 007 | Red |
| | | 008 ⇔ 011 | Yellow |
| | | 012 ⇔ 015 | Sky Blue |
| | | 016 ⇔ 019 | Green |
| | | 020 ⇔ 023 | Lime Green |
| | | 024 ⇔ 027 | Natural White |
| | | 028 ⇔ 031 | Lavender |
| | | 032 ⇔ 035 | Canary Yellow |
| | | 036 ⇔ 039 | Magenta |
| | | 040 ⇔ 043 | Cyan |
| | | 044 ⇔ 047 | Warm White |
| | | 048 ⇔ 051 | Lilac |
| | | 052 ⇔ 055 | Pale Blue |
| | | 056 ⇔ 063 | Ultraviolet |
| | | 064 ⇔ 067 | White / Red |
| | | 068 ⇔ 071 | Red / Yellow |
| | | 072 ⇔ 075 | Yellow / Sky Blue |
| | | 076 ⇔ 079 | Sky Blue / Green |
| | | 080 ⇔ 083 | Green / Lime Green |
| | | 084 ⇔ 087 | Lime Green / Natural White |
| | | 088 ⇔ 091 | Natural White / Lavender |
| | | 092 ⇔ 095 | Lavender / Canary Yellow |
| | | 096 ⇔ 099 | Canary Yellow / Magenta |
| | | 100 ⇔ 103 | Magenta / Cyan |
| | | 104 ⇔ 107 | Cyan / Warm White |
| | | 108 ⇔ 111 | Warm White / Lilac |
| | | 112 ⇔ 115 | Lilac / Pale Blue |
| | | 116 ⇔ 119 | Pale Blue / Ultraviolet |
| | | 120 ⇔ 127 | Ultraviolet / White |
| | | 128 ⇔ 191 | Color cycling rainbow, slow to fast |
| | | 192 ⇔ 255 | Reverse color cycling rainbow, slow to fast |

**8Ch** (cont.)

| CHANNEL | FUNCTION | VALUE | PERCENT/SETTING |
|---|---|---|---|
| 4 | **Gobo Wheel** (see Gobos) | 000 ⇔ 003 | Open |
| | | 004 ⇔ 007 | Gobo 1 |
| | | 008 ⇔ 011 | Gobo 2 |
| | | 012 ⇔ 015 | Gobo 3 |
| | | 016 ⇔ 019 | Gobo 4 |
| | | 020 ⇔ 023 | Gobo 5 |
| | | 024 ⇔ 027 | Gobo 6 |
| | | 028 ⇔ 031 | Gobo 7 |
| | | 032 ⇔ 035 | Gobo 8 |
| | | 036 ⇔ 039 | Gobo 9 |
| | | 040 ⇔ 043 | Gobo 10 |
| | | 044 ⇔ 047 | Gobo 11 |
| | | 048 ⇔ 051 | Gobo 12 |
| | | 052 ⇔ 055 | Gobo 13 |
| | | 056 ⇔ 059 | Gobo 14 |
| | | 060 ⇔ 063 | Gobo 15 |
| | | 064 ⇔ 067 | Gobo 16 |
| | | 068 ⇔ 071 | Gobo 17 |
| | | 072 ⇔ 075 | Gobo 17 shake, slow to fast |
| | | 076 ⇔ 079 | Gobo 16 shake, slow to fast |
| | | 080 ⇔ 083 | Gobo 15 shake, slow to fast |
| | | 084 ⇔ 087 | Gobo 14 shake, slow to fast |
| | | 088 ⇔ 091 | Gobo 13 shake, slow to fast |
| | | 092 ⇔ 095 | Gobo 12 shake, slow to fast |
| | | 096 ⇔ 099 | Gobo 11 shake, slow to fast |
| | | 100 ⇔ 103 | Gobo 10 shake, slow to fast |
| | | 104 ⇔ 107 | Gobo 9 shake, slow to fast |
| | | 108 ⇔ 111 | Gobo 8 shake, slow to fast |
| | | 112 ⇔ 115 | Gobo 7 shake, slow to fast |
| | | 116 ⇔ 119 | Gobo 6 shake, slow to fast |
| | | 120 ⇔ 123 | Gobo 5 shake, slow to fast |
| | | 124 ⇔ 127 | Gobo 4 shake, slow to fast |
| | | 128 ⇔ 131 | Gobo 3 shake, slow to fast |
| | | 132 ⇔ 135 | Gobo 2 shake, slow to fast |
| | | 136 ⇔ 139 | Gobo 1 shake, slow to fast |
| | | 140 ⇔ 143 | Open |
| | | 144 ⇔ 199 | Cycle effect, slow to fast |
| | | 200 ⇔ 255 | Reverse cycle effect, slow to fast |
| 5 | **Prism** | 000 ⇔ 007 | No function |
| | | 008 ⇔ 012 | Prism |
| | | 013 ⇔ 130 | Rotation, slow to fast |
| | | 131 ⇔ 247 | Reverse rotation, slow to fast |
| | | 248 ⇔ 255 | Prism |
| 6 | **Focus** | 000 ⇔ 255 | Focus, big to small |

**8Ch** (cont.)

| CHANNEL | FUNCTION | VALUE | PERCENT/SETTING |
|---|---|---|---|
| 7 | **Shutter** | 000 ⇔ 007 | Closed |
| | | 008 ⇔ 015 | Open |
| | | 016 ⇔ 131 | Strobe, slow to fast |
| | | 132 ⇔ 167 | Slow open, fast close, slow to fast |
| | | 168 ⇔ 203 | Fast open, slow close, slow to fast |
| | | 204 ⇔ 239 | Pulse strobe, slow to fast |
| | | 240 ⇔ 247 | Random strobe, slow to fast |
| | | 248 ⇔ 255 | Open |
| 8 | **Frost** | 000 ⇔ 255 | 0–100% |

## Configuration (Standalone)

Set the product in one of the standalone modes to control without a DMX controller.

**Never connect a product that is operating in any standalone mode to a DMX string connected to a DMX controller. Products in standalone mode may transmit DMX signals that could interfere with the DMX signals from the controller.**

### Automatic Programs

To run the Intimidator Beam 140SR V2 in automatic mode, follow the instructions below:

1. Press **<MENU>**.
2. Use **<UP>** or **<DOWN>** to select **Run Mode**.
3. Press **<ENTER>**.
4. Use **<UP>** or **<DOWN>** to select **Auto**.
5. Press **<ENTER>**.

### Sound-Active Mode

To run the Intimidator Beam 140SR V2 in sound-active mode, do the following:

1. Press **<MENU>**.
2. Use **<UP>** or **<DOWN>** to select **Run Mode**.
3. Press **<ENTER>**.
4. Use **<UP>** or **<DOWN>** to select **Sound**.
5. Press **<ENTER>**.

### Sound Sensitivity

To change the sound sensitivity on the Intimidator Beam 140SR V2, follow the instructions below:

1. Press **<MENU>**.
2. Use **<UP>** or **<DOWN>** to select **Setup**.
3. Press **<ENTER>**.
4. Use **<UP>** or **<DOWN>** to select **Sensitivity**.
5. Press **<ENTER>**.
6. Use **<UP>** or **<DOWN>** to increase or decrease the sound sensitivity, from **001–100**.
7. Press **<ENTER>**.

**The product will only respond to low frequencies of music (bass and drums).**

### Manual Mode

To operate the Intimidator Beam 140SR V2 manually through the menu, do the following:

1. Press **<MENU>**.
2. Use **<UP>** or **<DOWN>** to select **Run Mode**.
3. Press **<ENTER>**.
4. Use **<UP>** or **<DOWN>** to select **Manual**.
5. Press **<ENTER>**.
6. Use **<UP>** or **<DOWN>** to select from **Pan**, **Tilt**, **Color**, **Gobo**, **Prism**, **Focus**, **Frost**, **Dimmer**, or **Shutter**.
7. Press **<ENTER>**.
8. Use **<UP>** or **<DOWN>** to increase or decrease the value of the function, from **000–255**.
9. Press **<ENTER>**.
10. Repeat steps 6-9 until the product is set as desired.

## Configuration (Settings)

### Pan Reverse

To set the pan orientation on the Intimidator Beam 140SR V2, follow the instructions below:

1. Press **<MENU>**.
2. Use **<UP>** or **<DOWN>** to select **Setup**.
3. Press **<ENTER>**.
4. Use **<UP>** or **<DOWN>** to select **Pan Reverse**.
5. Press **<ENTER>**.
6. Use **<UP>** or **<DOWN>** to select **OFF** (normal pan orientation) or **ON** (reverse pan orientation).
7. Press **<ENTER>**.

### Tilt Reverse

To set the tilt orientation on the Intimidator Beam 140SR V2, do the following:

1. Press **<MENU>**.
2. Use **<UP>** or **<DOWN>** to select **Setup**.
3. Press **<ENTER>**.
4. Use **<UP>** or **<DOWN>** to select **Tilt Reverse**.
5. Press **<ENTER>**.
6. Use **<UP>** or **<DOWN>** to select **OFF** (normal tilt orientation) or **ON** (reverse tilt orientation).
7. Press **<ENTER>**.

### Screen Reverse

To set the display orientation on the Intimidator Beam 140SR V2, follow the instructions below:

1. Press **<MENU>**.
2. Use **<UP>** or **<DOWN>** to select **Setup**.
3. Press **<ENTER>**.
4. Use **<UP>** or **<DOWN>** to select **Screen Reverse**.
5. Press **<ENTER>**.
6. Use **<UP>** or **<DOWN>** to select **OFF** (normal display orientation) or **ON** (reverse display orientation).
7. Press **<ENTER>**.

### Pan Angle

To set the pan angle range on the Intimidator Beam 140SR V2, do the following:

1. Press **<MENU>**.
2. Use **<UP>** or **<DOWN>** to select **Setup**.
3. Press **<ENTER>**.
4. Use **<UP>** or **<DOWN>** to select **Pan Angle**.
5. Press **<ENTER>**.
6. Use **<UP>** or **<DOWN>** to select from **540** (540°), **360** (360°), or **180** (180°).
7. Press **<ENTER>**.

## Tilt Angle

To set the tilt angle range on the Intimidator Beam 140SR V2, follow the instructions below:

1. Press **<MENU>**.
2. Use **<UP>** or **<DOWN>** to select **Setup**.
3. Press **<ENTER>**.
4. Use **<UP>** or **<DOWN>** to select **Tilt Angle**.
5. Press **<ENTER>**.
6. Use **<UP>** or **<DOWN>** to select from **270** (270°), **180** (180°), or **90** (90°).
7. Press **<ENTER>**.

## Totem Mode

To activate the Totem mode, do the following:

1. Press **<MENU>**.
2. Use **<UP>** or **<DOWN>** to select **Setup**.
3. Press **<ENTER>**.
4. Use **<UP>** or **<DOWN>** to select **Totem Mode**.
5. Press **<ENTER>**.
6. Use **<UP>** or **<DOWN>** to select **OFF** (normal range of motion), **UP** (upward tilt range), or **DOWN** (downward tilt range).
7. Press **<ENTER>**.

## Lamp Settings

### Manual Lamp Control

To turn the lamp on or off on the Intimidator Beam 140SR V2, follow the instructions below:

1. Press **<MENU>**.
2. Use **<UP>** or **<DOWN>** to select **Setup**.
3. Press **<ENTER>**.
4. Use **<UP>** or **<DOWN>** to select **Lamp Setting**.
5. Press **<ENTER>**.
6. Use **<UP>** or **<DOWN>** to select **On/Off**.
7. Press **<ENTER>**.
8. Use **<UP>** or **<DOWN>** to select **OFF** or **ON**.
9. Press **<ENTER>**.

### Lamp State at Power On

To define whether the lamp should be on or off when powering on the Intimidator Beam 140SR V2, do the following:

1. Press **<MENU>**.
2. Use **<UP>** or **<DOWN>** to select **Setup**.
3. Press **<ENTER>**.
4. Use **<UP>** or **<DOWN>** to select **Lamp Setting**.
5. Press **<ENTER>**.
6. Use **<UP>** or **<DOWN>** to select **State/Power On**.
7. Press **<ENTER>**.
8. Use **<UP>** or **<DOWN>** to select **OFF** or **ON**.
9. Press **<ENTER>**.

### Lamp Control Via DMX

To enable or disable the Intimidator Beam 140SR V2 lamp from being controllable through DMX, follow the instructions below:

1. Press **<MENU>**.
2. Use **<UP>** or **<DOWN>** to select **Setup**.
3. Press **<ENTER>**.
4. Use **<UP>** or **<DOWN>** to select **Lamp Setting**.
5. Press **<ENTER>**.
6. Use **<UP>** or **<DOWN>** to select **Off Via DMX**.
7. Press **<ENTER>**.
8. Use **<UP>** or **<DOWN>** to select **NO** or **YES**.
9. Press **<ENTER>**.

### On if DMX is On

To set the Intimidator Beam 140SR V2 lamp to be on when a DMX signal is present, do the following:

1. Press **<MENU>**.
2. Use **<UP>** or **<DOWN>** to select **Setup**.
3. Press **<ENTER>**.
4. Use **<UP>** or **<DOWN>** to select **Lamp Setting**.
5. Press **<ENTER>**.
6. Use **<UP>** or **<DOWN>** to select **On if DMX On**.
7. Press **<ENTER>**.
8. Use **<UP>** or **<DOWN>** to select **NO** or **YES**.
9. Press **<ENTER>**.

### Off if DMX is Off

To set the Intimidator Beam 140SR V2 lamp to be off when there is no DMX signal present, follow the instructions below:

1. Press **<MENU>**.
2. Use **<UP>** or **<DOWN>** to select **Setup**.
3. Press **<ENTER>**.
4. Use **<UP>** or **<DOWN>** to select **Lamp Setting**.
5. Press **<ENTER>**.
6. Use **<UP>** or **<DOWN>** to select **Off if DMX Off**.
7. Press **<ENTER>**.
8. Use **<UP>** or **<DOWN>** to select **NO** or **YES**.
9. Press **<ENTER>**.

### Ignition Delay at Power On

To set the amount of time after power on before the Intimidator Beam 140SR V2 lamp turns on, do the following:

1. Press **<MENU>**.
2. Use **<UP>** or **<DOWN>** to select **Setup**.
3. Press **<ENTER>**.
4. Use **<UP>** or **<DOWN>** to select **Lamp Setting**.
5. Press **<ENTER>**.
6. Use **<UP>** or **<DOWN>** to select **Ignition Delay**.
7. Press **<ENTER>**.
8. Use **<UP>** or **<DOWN>** to increase or decrease the delay time, from **000–255** (0 seconds to 255 seconds).
9. Press **<ENTER>**.

**Warning! When power linking this product, lamp ignitions must be offset to avoid high inrush currents. The ignition delay of the first product in a power linking chain must be set to no less than five seconds. The ignition delay of each subsequent product in the chain must be at least five seconds more than the previous product.**

### Low Power Delay with Shutter Closed

To set the amount of time after leaving the shutter closed before the Intimidator Beam 140SR V2 lamp enters low power mode, follow the instructions below:

1. Press **<MENU>**.
2. Use **<UP>** or **<DOWN>** to select **Setup**.
3. Press **<ENTER>**.
4. Use **<UP>** or **<DOWN>** to select **Lamp Setting**.
5. Press **<ENTER>**.
6. Use **<UP>** or **<DOWN>** to select **Low Power Delay**.
7. Press **<ENTER>**.
8. Use **<UP>** or **<DOWN>** to increase or decrease the delay time, from **000–255** (0 seconds to 255 seconds).
9. Press **<ENTER>**.

### Reset Lamp Timer

To reset the record of how much time the Intimidator Beam 140SR V2 lamp has spent powered on, do the following:

1. Press **<MENU>**.
2. Use **<UP>** or **<DOWN>** to select **Setup**.
3. Press **<ENTER>**.
4. Use **<UP>** or **<DOWN>** to select **Lamp Setting**.
5. Press **<ENTER>**.
6. Use **<UP>** or **<DOWN>** to select **Reset Lamp Timer**.
7. Press **<ENTER>**.
8. Use **<UP>** or **<DOWN>** to select **NO** or **YES**.
9. Press **<ENTER>**.

### Lamp Power

The Intimidator Beam 140SR V2 can operate with either a 132 W Osram HRI lamp, or a 140 W Osram HRI lamp.

To set the Intimidator Beam 140SR V2 in the correct mode for the installed lamp, follow the instructions below:

1. Press **<MENU>**.
2. Use **<UP>** or **<DOWN>** to select **Setup**.
3. Press **<ENTER>**.
4. Use **<UP>** or **<DOWN>** to select **Lamp Setting**.
5. Press **<ENTER>**.
6. Use **<UP>** or **<DOWN>** to select **Lamp Power**.
7. Press **<ENTER>**.
8. Use **<UP>** or **<DOWN>** to select **132** or **140**.
9. Press **<ENTER>**.

## Maintenance Timer

### Maintenance Timer Interval

To define the length of the maintenance cycle on the Intimidator Beam 140SR V2, do the following:

1. Press **<MENU>**.
2. Use **<UP>** or **<DOWN>** to select **Setup**.
3. Press **<ENTER>**.
4. Use **<UP>** or **<DOWN>** to select **Special Set**.
5. Press **<ENTER>**.
6. Use **<UP>** or **<DOWN>** to select **Interval**.
7. Press **<ENTER>**.
8. Use **<UP>** or **<DOWN>** to increase or decrease the time, from **10**–**250** (10 hours to 250 hours).
9. Press **<ENTER>**.

### Reset Maintenance Timer

To reset the Intimidator Beam 140SR V2 maintenance timer, follow the instructions below:

1. Press **<MENU>**.
2. Use **<UP>** or **<DOWN>** to select **Setup**.
3. Press **<ENTER>**.
4. Use **<UP>** or **<DOWN>** to select **Special Set**.
5. Press **<ENTER>**.
6. Use **<UP>** or **<DOWN>** to select **Remain Time**.
7. Press **<ENTER>**.
8. Use **<UP>** or **<DOWN>** to select **NO** or **RESET**.
9. Press **<ENTER>**.

## Reset

To reset all functions on the Intimidator Beam 140SR V2, do the following:

1. Press **<MENU>**.
2. Use **<UP>** or **<DOWN>** to select **Setup**.
3. Press **<ENTER>**.
4. Use **<UP>** or **<DOWN>** to select **Reset**.
5. Press **<ENTER>**.

## Factory Reset

To restore the Intimidator Beam 140SR V2 to factory default settings, follow the instructions below:

1. Press **<MENU>**.
2. Use **<UP>** or **<DOWN>** to select **Setup**.
3. Press **<ENTER>**.
4. Use **<UP>** or **<DOWN>** to select **Factory Set**.
5. Press **<ENTER>**.

## System Information

To view the system information on the Intimidator Beam 140SR V2, do the following:

1. Press **<MENU>**.
2. Use **<UP>** or **<DOWN>** to select **Sys Info**.
3. Press **<ENTER>**.

## IRC-6 Infrared Remote Control

The Intimidator Beam 140SR V2 is compatible with the IRC-6 infrared remote control from Chauvet. To set the Intimidator Beam 140SR V2 to IR mode, follow the instructions below:

1. Press **<MENU>**.
2. Use **<UP>** or **<DOWN>** to select **Run Mode**.
3. Press **<ENTER>**.
4. Press **<UP>** or **<DOWN>** to select **IR**.
5. Press **<ENTER>**.

### IRC-6 Operation

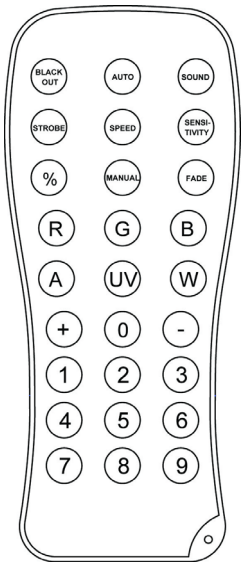


**The list below describes which features each button controls:**

- **<BLACKOUT>** - Keeps shutter closed.
- **<AUTO>** - Activates Auto mode. Use **<+>**, **<->**, or **<0>**–**<9>** to select an auto program.
- **<SOUND>** - Activates Sound mode.
- **<STROBE>** - Activates Strobe control. Use **<+>** or **<->** to increase or decrease the strobe speed from **00** (off) to **20**
- **<SPEED>** - Sets Pan/Tilt Speed. Use **<+>** or **<->** to increase or decrease the pan/tilt speed from **000** (fastest) to **255** (slowest)
- **<SENSITIVITY>** - Sets Sound Sensitivity. Use **<+>** or **<->** to increase or decrease the sensitivity from **001** (lowest) to **100** (highest)
- **<%>** - Sets Dimmer value. Use **<+>** or **<->** to widen or narrow the shutter.
- **<MANUAL>** - Cycles through static gobos.
- **<FADE>** - Cycles through static colors.
- **<R>** - Sets color wheel rotation speed. Use **<+>** or **<->** to increase or decrease the speed from **000** (slowest) to **100** (fastest)
- **<G>** - Sets gobo wheel rotation speed. Use **<+>** or **<->** to increase or decrease the speed from **000** (slowest) to **100** (fastest)
- **<B>** - Activates Auto Color/Gobo mode.
- **<A>** - Sets manual Pan/Tilt values. Press **<A>** to toggle between pan and tilt. Use **<+>** or **<->** to increase or decrease the pan/tilt value, from **000–255**.
- **<UV>**/**<P>** - sets manual Frost and Focus values. Press **<UV>**/**<P>** to toggle between frost and focus. Use **<+>** or **<->** to increase or decrease the frost/focus value, from **000–255**.
- **<W>** - Sets manual Prism values. Use **<+>** or **<->** to increase or decrease the prism value, from **000–255**.
- **<+>** - Increases a value when in a function.
- **<->** - Decreases a value when in a function.
- **<0>**–**<9>** - Selects Auto programs 0–9.

## Master/Slave Mode

The Master/Slave mode allows a single Intimidator Beam 140SR V2 product (the “master”) to control the actions of one or more Intimidator Beam 140SR V2 products (the “slaves”) without the need of a DMX controller. The master product will be set to operate in either Stand-Alone mode or with the IRC-6, while the slave products will be set to operate in Slave mode. Once set and connected, the slave products will operate in unison with the master product.

Configure the products as indicated below.

**Slave products:**

1. Press **<MENU>**.
2. Use **<UP>** or **<DOWN>** to select **Run Mode**.
3. Press **<ENTER>**.
4. Use **<UP>** or **<DOWN>** to select **Slave**.
5. Press **<ENTER>**.
6. Use **<UP>** or **<DOWN>** to select from **Slave1**, **Slave2**, **Slave3**, or **Slave4**.
   - Select **Slave1** for 100% synchronized actions.
   - Select **Slave2**, **Slave3**, or **Slave4** for a delayed show, creating a wave effect.
7. Connect the DMX input of the first slave product to the DMX output of the master product.
8. Connect the DMX input of the subsequent slave products to the DMX output of the previous slave product.
9. Finish setting and connecting all the slave products.

**Master product:**

1. Set the master product to operate in Stand-Alone mode or with the IRC-6.
2. Make the master product the first product in the DMX daisy chain.

- **Configure all the slave products before connecting the master to the daisy chain.**
- **Never connect a DMX controller to a DMX string configured for Master/Slave operation because the controller may interfere with the signals from the master.**
- **Do not connect more than 31 slaves to the master.**

## Zero Adjust Mode

The Intimidator Beam 140SR V2 contains a passcode protected mode which allows the user to calibrate and adjust several of the product’s operating parameters.

In order to access this mode, do the following:

1. Press and hold **<MENU>** for at least 3 seconds.
2. Use **<UP>** (increases the selected value) and **<DOWN>** (selects the next value) to enter the passcode: **2323**.
3. Press **<ENTER>**.

In this mode, the starting positions for the following can be adjusted:

| PARAMETER | DEFAULT | FUNCTION |
|---|---|---|
| **PAN** | **111** | Pan motor |
| **TILT** | **118** | Tilt motor |
| **GOBO** | **076** | Gobo wheel |
| **COLOR** | **136** | Color wheel |
| **PRISM** | **169** | Prism assembly |
| **FOCUS** | **092** | Focus assembly |
| **FROST** | **191** | Frost assembly |
| **DIMMER** | **128** | Shutter assembly |

To adjust the starting position of one of these parameters, follow the instructions below:

1. Access the Zero Adjust mode.
2. Use **<UP>** or **<DOWN>** to select the parameter to be adjusted.
3. Press **<ENTER>**.
4. Use **<UP>** or **<DOWN>** to increase or decrease the selected value, from **000–255**.
5. Press **<ENTER>**.

# 5. MAINTENANCE

## Product Maintenance

Dust build-up reduces light output performance and can cause overheating. This can lead to reduction of the light source's life and/or mechanical wear. To maintain optimum performance and minimize wear, clean your lighting products at least twice a month. However, be aware that usage and environmental conditions could be contributing factors to increase the cleaning frequency.

To clean the product, follow the instructions below:

1. Unplug the product from power.
2. Wait until the product is at room temperature.
3. Use a vacuum (or dry compressed air) and a soft brush to remove dust collected on the external surface/vents.
4. Clean all transparent surfaces with a mild soap solution, ammonia-free glass cleaner, or isopropyl alcohol.
5. Apply the solution directly to a soft, lint free cotton cloth or a lens cleaning tissue.
6. Softly drag any dirt or grime to the outside of the transparent surface.
7. Gently polish the transparent surfaces until they are free of haze and lint.

**Always dry the transparent surfaces carefully after cleaning them.**

## Lamp Replacement

The Intimidator Beam 140SR V2 is equipped with a 140 W Osram HRI discharge lamp. Follow the procedure below to safely replace the lamp.

- **Disconnect the product from AC power before opening.**
- **Do not power the product on without a lamp installed.**

### Procedure

1. Unplug the Intimidator Beam 140SR V2 from power.
2. Allow several minutes for the product to cool.
3. Remove 4 screws from the bottom plate of the moving head.

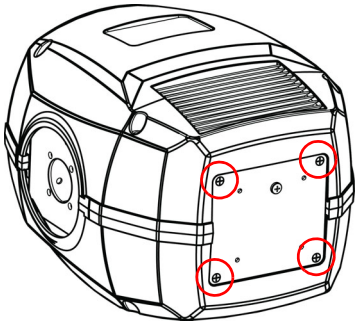

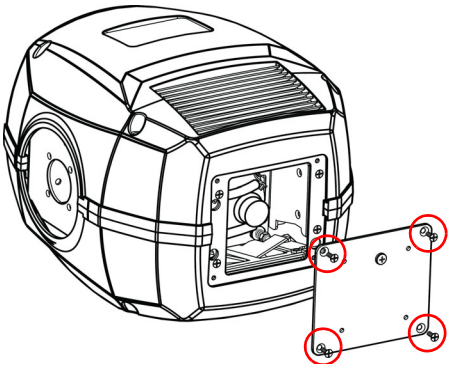

4. Unplug the 2 wires connected to the lamp.

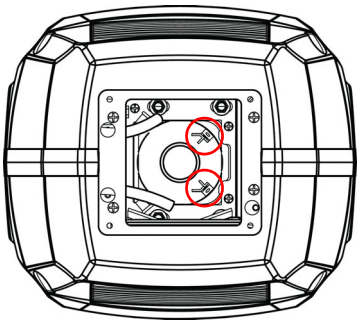

5. Push the lamp against the metal tension plates, lifting up from the open side.

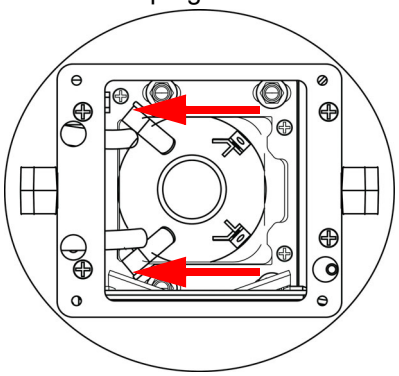

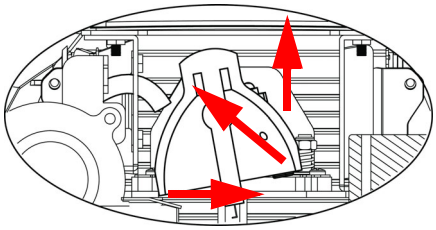

6. Slide the lamp out of the assembly by tilting it against the tension plates.
7. Reverse the procedure to install the new lamp. Ensure the lamp is centered in the assembly.

### Maintaining Lamp Lifespan

Observe the following to preserve the quality and lifespan of the Intimidator Beam 140SR V2 lamp:

**ALWAYS turn the lamp off by using the DMX controller or the product's control panel, then wait at least 5 minutes before switching off the product. This will keep the fans running to extract any remaining heat from the product's head.**

- **DO NOT power cycle the product unless it is necessary.**
- **DO NOT touch the lamp without wearing gloves to avoid leaving grease on the bulb or on the contacts that could reduce the lamp's life.**
- **ALWAYS change the lamp when it has reached its recommended lifespan to avoid the risk of lamp explosion.**

## Lamp Adjustment

To ensure the lamp is positioned correctly, it must be adjusted after installation with the Lamp Adjustment Knob. To access the Lamp Adjustment Knob:

1. Ensure the product is stationary before continuing.
2. Remove the head cover of the Intimidator Beam 140SR V2 by removing 4 Phillips-head screws.

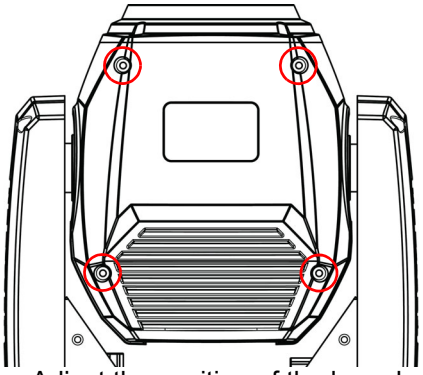

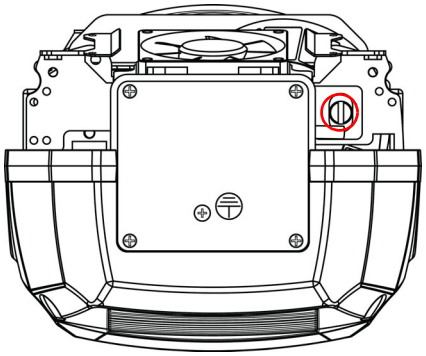

3. Adjust the position of the lamp by turning the Lamp Adjustment Knob clockwise or counter-clockwise with a flat-head screwdriver.

**Do NOT touch the lamp, any electrical contact, or wire while the product is powered. Practice safety precautions at all times while working on powered electronics.**

**Ensure the moving head is stationary before performing this procedure.**

# 6. TECHNICAL SPECIFICATIONS

**Dimensions and Weight**

| LENGTH | WIDTH | HEIGHT | WEIGHT |
|---|---|---|---|
| 12.7 in (322 mm) | 8.6 in (220 mm) | 16.5 in (420 mm) | 25.8 lb (11.7 kg) |

**Note**: Dimensions in inches rounded to the nearest decimal digit.

**Power**

| POWER SUPPLY TYPE | RANGE | VOLTAGE SELECTION |
|---|---|---|
| Switching (internal) | 100 to 240 VAC, 50/60 Hz | Auto-ranging |

| PARAMETER | 120 V, 60 HZ | 230 V, 50 HZ |
|---|---|---|
| Consumption | 228 W | 224 W |
| Operating Current | 2 A | 1.2 A |
| Power linking current (products) | 8 A (3 products) | 8 A (6 products) |
| Fuse | F 4 A, 250 V | F 4 A, 250 V |

| POWER I/O | U.S./WORLDWIDE | UK/EUROPE |
|---|---|---|
| Power input connector | powerCON®-compatible | powerCON®-compatible |
| Power output connector | powerCON®-compatible | powerCON®-compatible |
| Power Cord plug | Edison (U.S.) | Local Plug |

**Light Source**

| TYPE | POWER | LIFESPAN |
|---|---|---|
| Osram Sirius HRI Discharge Lamp | 140 W (included)<br>132 W (optional) | 6,000 hours |

**Photometrics**

| PARAMETER | VALUE | PARAMETER | VALUE |
|---|---|---|---|
| Strobe Rate | 0 to 20 Hz | Beam Angle (beam) | 3° |
| Illuminance (5 m) | 381,500 lux | Beam Angle (frost) | 21° |
| Illuminance (15 m) | 37,900 lux | | |

**Thermal**

| MAXIMUM EXTERNAL TEMPERATURE | COOLING SYSTEM |
|---|---|
| 104 °F (40 °C) | Fan-assisted convection |

**DMX**

| I/O CONNECTOR | CHANNEL RANGE |
|---|---|
| 3-pin XLR | 8 or 14 |

**Ordering**

| PRODUCT NAME | ITEM CODE | UPC NUMBER |
|---|---|---|
| Intimidator Beam 140SR V2 | 08011231 | 781462215798 |

UL 1573
CSA C22.2 No. 166
E113093

# RETURNS

In case you need to get support or return a product:

- If you are located in the U.S., contact Chauvet World Headquarters.
- If you are located in the U.K. or Ireland, contact Chauvet Europe Ltd.
- If you are located in Benelux, contact Chauvet Europe BVBA.
- If you are located in France, contact Chauvet France.
- If you are located in Germany, contact Chauvet Germany.
- If you are located in Mexico, contact Chauvet Mexico.
- If you are located in any other country, DO NOT contact Chauvet. Instead, contact your local distributor. See www.chauvetdj.com for distributors outside the U.S., U.K., Ireland, Benelux, France, Germany, or Mexico.

**If you are located outside the U.S., U.K., Ireland, Mexico, or Benelux, contact your distributor of record and follow their instructions on how to return Chauvet products to them. Visit our website www.chauvetdj.com for contact details.**

Call the corresponding Chauvet Technical Support office and request a Return Merchandise Authorization (RMA) number before shipping the product. Be prepared to provide the model number, serial number, and a brief description of the cause for the return.

To submit a service request online, go to www.chauvetdj.com/service-request.

Send the merchandise prepaid, in its original box, and with its original packing and accessories. Chauvet will not issue call tags.

Clearly label the package with the RMA number. Chauvet will refuse any product returned without an RMA number.

**Write the RMA number on a properly affixed label. DO NOT write the RMA number directly on the box.**

Before sending the product, clearly write the following information on a piece of paper and place it inside the box:

- Your name
- Your address
- Your phone number
- RMA number
- A brief description of the problem

Be sure to pack the product properly. Any shipping damage resulting from inadequate packaging will be your responsibility. FedEx packing or double-boxing are recommended.

**Chauvet reserves the right to use its own discretion to repair or replace returned product(s).**

# Contact Us

| General Information | Technical Support |
|---|---|
| **Chauvet World Headquarters** | |
| Address: 5200 NW 108th Ave.<br>Sunrise, FL 33351<br>Voice: (954) 577-4455<br>Fax: (954) 929-5560<br>Toll Free: (800) 762-1084 | Voice: (844) 393-7575<br>Fax: (954) 756-8015<br>Email: chauvetcs@chauvetlighting.com<br><br>Website: www.chauvetdj.com |
| **Chauvet Europe Ltd** | |
| Address: Unit 1C<br>Brookhill Road Industrial Estate<br>Pinxton, Nottingham, UK<br>NG16 6NT<br>Voice: +44 (0) 1773 511115<br>Fax: +44 (0) 1773 511110 | Email: UKtech@chauvetlighting.eu<br><br>Website: www.chauvetdj.eu |
| **Chauvet Europe BVBA** | |
| Address: Stokstraat 18<br>9770 Kruishoutem<br>Belgium<br>Voice: +32 9 388 93 97 | Email: BNLtech@chauvetlighting.eu<br><br>Website: www.chauvetdj.eu |
| **Chauvet France** | |
| Address: 3, Rue Ampère<br>91380 Chilly-Mazarin<br>France<br>Voice: +33 1 78 85 33 59 | Email: FRtech@chauvetlighting.fr<br><br>Website: www.chauvetdj.eu |
| **Chauvet Germany** | |
| Address: Bruno-Bürgel-Str. 11<br>28759 Bremen<br>Germany<br>Voice: +49 421 62 60 20 | Email: DEtech@chauvetlighting.de<br><br>Website: www.chauvetdj.eu |
| **Chauvet Mexico** | |
| Address: Av. de las Partidas 34 - 3B<br>(Entrance by Calle 2)<br>Zona Industrial Lerma<br>Lerma, Edo. de México, CP 52000<br>Voice: +52 (728) 690-2010 | Email: servicio@chauvet.com.mx<br><br>Website: www.chauvetdj.mx |

Visit the applicable website above to verify our contact information and instructions to request support. Outside the U.S., U.K., Ireland, Mexico, France, Germany, or Benelux, contact the dealer of record.