SHOCKER PANEL FX IP

User Manual

CHAUVET DJ

Edition Notes

The Shocker Panel FX IP User Manual includes a description, safety precautions, installation, programming, operation, and maintenance instructions for the Shocker Panel FX IP as of the release date of this edition.

Trademarks

Chauvet, Chauvet DJ, the Chauvet logo, and Shocker are registered trademarks or trademarks of Chauvet & Sons, LLC (d/b/a Chauvet and Chauvet Lighting) in the United States and other countries. Other company and product names and logos referred to herein may be trademarks of their respective companies.

Copyright Notice

The works of authorship contained in this manual, including, but not limited to, all designs, text, and images are owned by Chauvet.

© Copyright 2026 Chauvet & Sons, LLC. All rights reserved.

Electronically published by Chauvet in the United States of America.

Manual Use

Chauvet authorizes its customers to download and print this manual for professional information purposes only. Chauvet expressly prohibits the usage, copy, storage, distribution, modification, or printing of this manual or its content for any other purpose without written consent from Chauvet.

Document Printing

For best results, print this document in color, on letter size paper (8.5 x 11 in), double-sided. If using A4 paper (210 x 297 mm), configure the printer to scale the content accordingly.

Intended Audience

Any person installing, operating, and/or maintaining this product should completely read through the guide that shipped with the product, as well as this manual, before installing, operating, or maintaining this product.

Disclaimer

Chauvet believes that the information contained in this manual is accurate in all respects. However, Chauvet assumes no responsibility and specifically disclaims any and all liability to any party for any loss, damage, or disruption caused by any errors or omissions in this document, whether such errors or omissions result from negligence, accident, or any other cause. Chauvet reserves the right to revise the content of this document without any obligation to notify any person or company of such revision; however, Chauvet has no obligation to make, and does not commit to make, any such revisions.

Document Revision

Go to www.chauvetdj.com for the latest version.

Revision	Date	Description
4	10/2026	Updated safety notes

TABLE OF CONTENTS

1. Before You Begin 1
- What Is Included 1
- Unpacking Instructions 1
- Claims 1
- Text Conventions 1
- Symbols 1
- Safety Notes 2

2. Introduction 3
- Product Overview 3
- Product Dimensions 4

3. Setup 5
- AC Power 5
  - Power Linking 5
- Mounting 6
  - Orientation 6
  - Rigging 6

4. Operation 7
- Control Panel Operation 7
- Menu Map 7
- DMX Configuration 8
  - Personality and Starting Address 8
- DMX Channel Assignments and Values 8
  - DMX Charts 8
  - 47Ch / 34Ch / 18Ch 8
  - 8Ch 13
- Standalone Configuration 15
  - Auto Show 15
  - Automatic Speed 15
  - Sound-Active Mode 15
  - Sound Sensitivity 15
  - Static Colors 15
  - Custom Color Mixing 15
  - Dimmer 16
  - DMX Loss 16
  - Fan Mode 16
  - Lock Screen 16
  - Back Light 16
- System Information 16
  - Factory Reset 16
  - System Update 16
- Wired Master/Slave Mode 17

5. Maintenance 18
- Product Maintenance 18

6. Technical Specifications 19

Contact Us 20
- Warranty & Returns 20

1. Before You Begin

What Is Included

- Shocker Panel FX IP
- Power cable
- PowerCON to bare end (EU only)
- Quick Reference Guide

Unpacking Instructions

Carefully unpack the product immediately and check the container to make sure all the parts are in the package and are in good condition.

Claims

If the box or the contents (the product and included accessories) appear damaged from shipping, or show signs of mishandling, notify the carrier immediately, not Chauvet. Failure to report damage to the carrier immediately may invalidate a claim. In addition, keep the box and contents for inspection.

For other issues, such as missing components or parts, damage not related to shipping, or concealed damage, file a claim with Chauvet within 7 days of delivery.

Text Conventions

Convention	Meaning
1–512	A range of values
50/60	A set of values of which only one can be chosen
Settings	A menu option not to be modified
<ENTER>	A key to be pressed on the product's control panel
ON	A value to be entered or selected

Symbols

Symbol	Meaning
	Electrical warning. Not following these instructions may cause electrical damage to the product, accessories, or the user.
	Critical installation, configuration, or operation information. Not following these instructions may make the product not work, cause damage to the product, or cause harm to the operator.
	Important installation or configuration information. The product may not function correctly if this information is not used.
	Useful information.

Safety Notes

These Safety Notes include important information about installation, use, and maintenance of the Shocker Panel FX IP.

- **ALWAYS:**
  - Connect to a grounded circuit.
  - Connect to operating voltages as specified on the product's spec sticker.
  - Disconnect from its power source during periods of inactivity.
  - Use a safety cable when suspending overhead.
  - Heed all restrictions and warnings on the spec sticker.
  - Mount in a location with at least 20 in (50 cm) of ventilation.
  - Use a clamp with a captive bolt when a single hanging bracket is used.
- In the event of a serious operating problem, stop using immediately.
- **DO NOT:**
  - Open this product or attempt any repairs. It contains no user-serviceable parts.
  - Look at the light source when the product is on.
  - Use if the power cord is crimped or damaged.
  - Disconnect by pulling on the power cord.
  - Allow flammable materials close to the product when it is operating.
  - Touch the housing when it is on.
  - Block any ventilation holes/slots in the housing.
  - Connect to a dimmer or rheostat.
  - Carry the product by its power cord.
  - Operate in temperatures higher than 113°F (45°C).
  - Expose to environments that exceed the Ingress Protection (IP) rating.
  - Submerge.
  - Leave outdoors for extended periods of time.
  - Expose to corrosive environmental conditions such as temperature, humidity, salinity, pressure, radiation, or shock.
  - Set this product on a flammable surface.

Keep this User Manual for future use. If the product is sold to someone else, be sure that they also receive this document.

2. Introduction

Product Overview

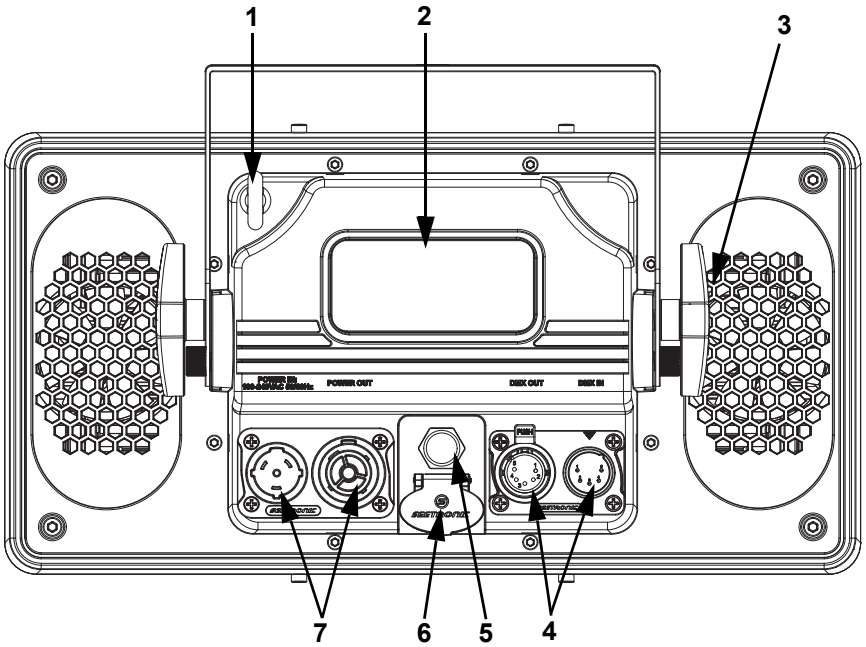

#	Name	#	Name
1	Safety cable loop	5	Condensation valve
2	LED display screen	6	USB Port
3	Bracket adjustment knob	7	Power in/out
4	5-pin DMX in/out		

Product Dimensions

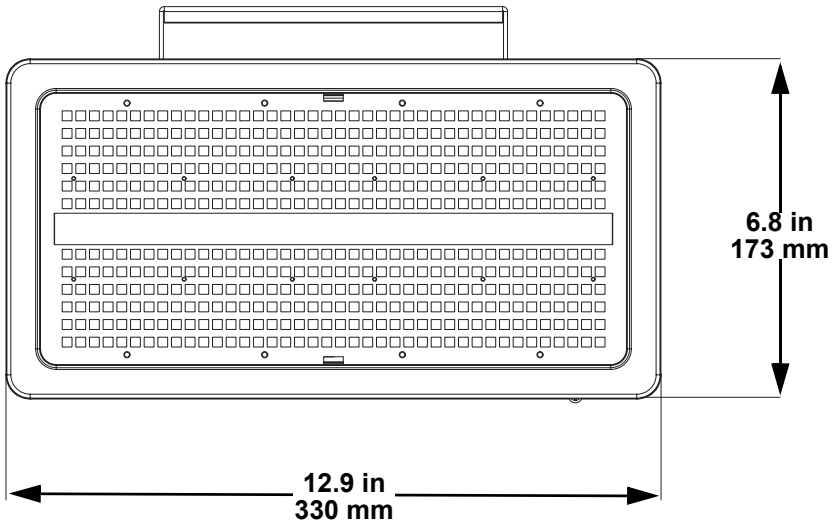

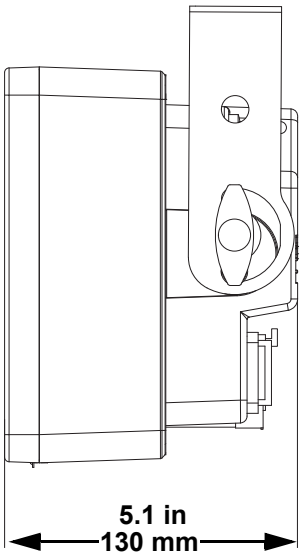

3. Setup

AC Power

The Shocker Panel FX IP has an auto-ranging power supply and it can work with an input voltage range of 100 to 240 VAC, 50/60 Hz.

To determine the product's power requirements (circuit breaker, power outlet, and wiring), use the current value listed on the label affixed to the product's back panel, or refer to the product's specifications chart. The listed current rating indicates the product's average current draw under normal conditions.

- **Always connect the product to a protected circuit (a circuit breaker or fuse). Make sure the product has an appropriate electrical ground to avoid the risk of electrocution or fire.**
- **To eliminate unnecessary wear and improve its lifespan, during periods of non-use completely disconnect the product from power via breaker or by unplugging it.**

Never connect the product to a rheostat (variable resistor) or dimmer circuit, even if the rheostat or dimmer channel serves only as a 0 to 100% switch.

Power Linking

This product provides power linking via the outlet located in the back of the product. See the diagram below for further explanation.

Power Linking Diagram

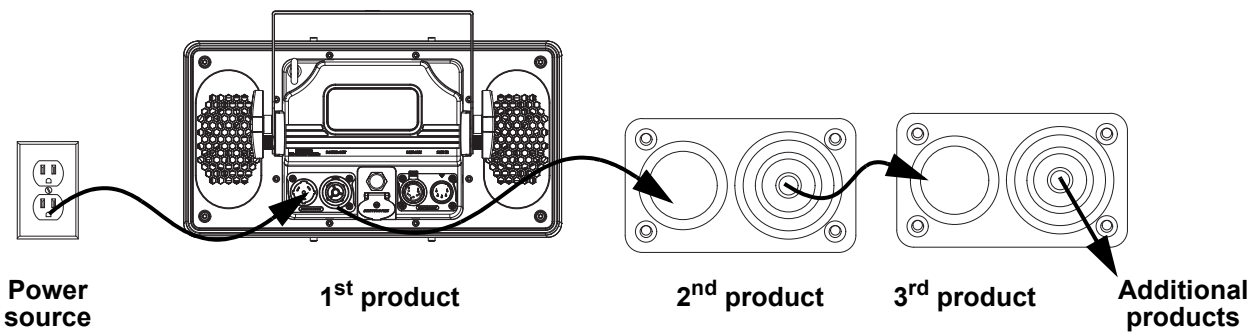

It is possible to link up to 6 Shocker Panel FX IP products on 120 VAC or up to 11 products on 230 VAC.

The power linking diagram shown above corresponds to the North American version of the product ONLY! If using the product in other markets, consult with the local Chauvet distributor as power linking connectors and requirements may differ by country or region.

Mounting

Before mounting the product, read and follow the safety recommendations indicated in the Safety Notes.

Orientation

The Shocker Panel FX IP may be mounted in any position; however, make sure adequate ventilation is provided around the product.

Rigging

- Before deciding on a location for the product, always make sure there is easy access to the product for maintenance and programming.
- Make sure that the structure and attachment points can support the weight before hanging the product (see the Technical Specifications section for weight information).
- When mounting the product overhead, always use a safety cable. Mount the product securely to a rigging point, such as an elevated platform or a truss.
- When rigging the product onto a truss, use a mounting clamp of appropriate weight capacity. The bracket has a 13-mm hole, which is appropriate for this purpose.
- The bracket adjustment knobs allow for directional adjustment when aiming the product to the desired angle. Only loosen or tighten the bracket knobs manually. Using tools could damage the knobs.
- When power linking multiple products, mount the products close enough for power linking cables to reach.
- When mounting the product on the floor, make sure that the product and cables are away from people and vehicles.

Mounting Diagram

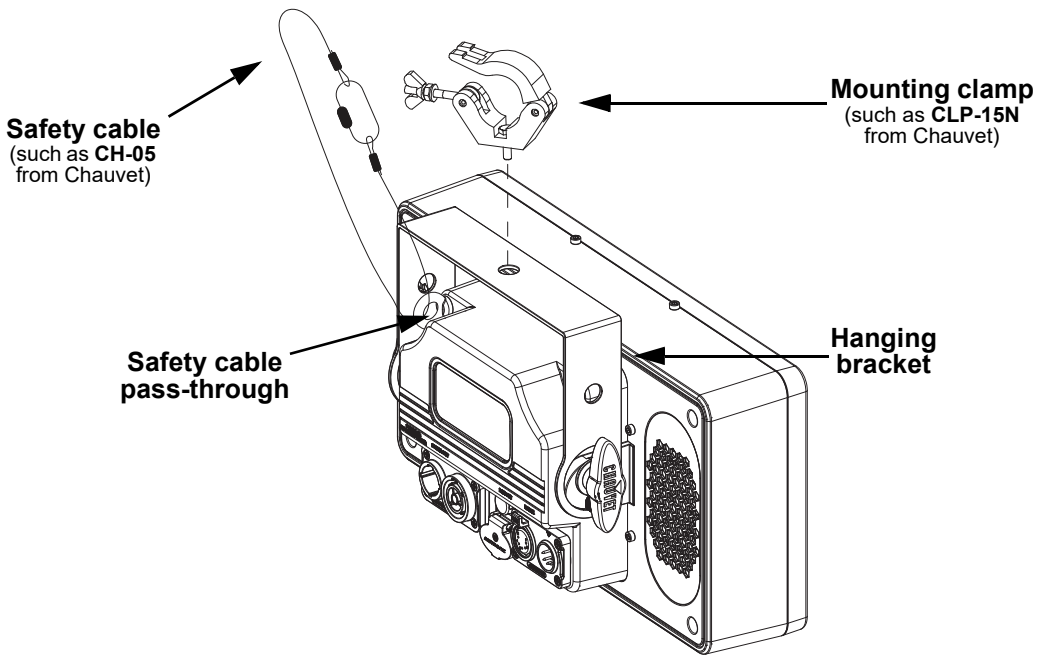

4. Operation

Control Panel Operation

To access the control panel functions, use the four buttons located underneath the display. Please refer to the Product Overview to see the button locations on the control panel.

Button	Name	Function
	<MENU>	Press to find an operation mode or exit the current menu option
	<UP>	Press to scroll up the list of options or to find a higher value
	<DOWN>	Press to scroll down the list of options or to find a lower value
	<ENTER>	Press to activate a menu option or a selected value

Menu Map

Refer to the Shocker Panel FX IP product page on www.chauvetdj.com for the latest menu map and software.

Main Menu	Programming Levels		Description
DMX Address	**001–505**		Selects DMX starting address
DMX Channel	**8Ch**		8-channel DMX mode
	18Ch		18-channel DMX mode
	34Ch		34-channel DMX mode
	47Ch		47-channel DMX mode
Auto Show	**Auto 1–41**		Selects automatic programs
Auto Speed	**000–099**		Adjusts the speed of automatic programs
Sound Show	**Sound 1–41**		Sets auto programs to sound sensitivity mode
Sensitivity	**000–100**		Adjusts sound sensitivity
Static Color	**Color 1–15**		Selects preset static colors
Manual Color	**Red**	**000–255**	Combines Red, Green, Blue, and White to make a custom color
	Green		
	Blue		
	White		
Dimmer Mode	**000–255**		Adjusts the intensity of the dimmer
DMX loss	**Blackout**		Blacks out the product when signal is lost
	Hold		Holds the last setting when signal is lost
	Auto		Sets the unit to Auto mode when signal is lost
	Sound		Sets the unit to Sound mode when signal is lost
Fan Mode	**Auto**		Sets fan to activate and deactivate automatically
	On		Sets fan to always on
Lock Screen	**Off**		Activates or disables the control panel lock, which keeps non-authorized personnel from changing the product's settings (Password <UP><DOWN><UP><DOWN><ENTER>
	On		

Main Menu	Programming Levels		Description
Back Light	On		Display backlight remains on
	10S		Turns off display backlight after 10 seconds of inactivity
	20S		Turns off display backlight after 30 seconds of inactivity
	30S		Turns off display backlight after 30 secondsof inactivity
Information	Show mode	_ _ _ _ _	
	Version	V_ _. _ _	Displays firmware version
Reset Factory	No		Resets settings to factory default
	Yes		
System Update	No		Allows for firmware update
	Yes		

DMX Configuration

The Shocker Panel FX IP works with a DMX controller. Information about DMX is in the Chauvet DMX Primer, which is available from the Chauvet website chauvetlighting.com/downloads/DMX_Primer_rev05_WO.pdf.

Personality and Starting Address

The Shocker Panel FX IP uses up to 47 DMX channels in the **47Ch** DMX mode, which defines the highest configurable/recommended address to **466**.

When selecting a starting DMX address, always consider the number of DMX channels the DMX mode uses. If the starting address is set too high, access to some channels could be restricted.

For information about the DMX protocol, download the DMX Primer from www.chauvetdj.com.

To select the personality and starting address, do the following:

1. Press **<MENU>** repeatedly until **8Ch**, **18Ch, 34Ch**, or **47Ch** shows on the display.
2. Press **<ENTER>**.
3. Use **<UP>** or **<DOWN>** to select the starting address, from **d001–512**.
4. Press **<ENTER>**.

DMX Channel Assignments and Values

DMX Charts

47Ch / 34Ch / 18Ch

18Ch	34Ch	47Ch	Function	Value	Percent/Setting
1	1	1	Master dimmer	000 ⇔ 255	0–100%
2	–	2	RGB dimmer	000 ⇔ 255	0–100%
3	–	–	Red	000 ⇔ 255	0–100%
4	–	–	Green	000 ⇔ 255	0–100%
5	–	–	Blue	000 ⇔ 255	0–100%
6	–	3	RGB strobe	000 ⇔ 005	No function
				006 ⇔ 255	RGB strobe, slow to fast
–	–	–	White	000 ⇔ 255	0–100%

18Ch	34Ch	47Ch	Function	Value	Percent/Setting
7	–	4	**RGB program**	**000 ⇔ 005**	No function
				006 ⇔ 012	Auto program 1
				013 ⇔ 018	Auto program 2
				019 ⇔ 025	Auto program 3
				026 ⇔ 031	Auto program 4
				032 ⇔ 038	Auto program 5
				039 ⇔ 044	Auto program 6
				045 ⇔ 050	Auto program 7
				051 ⇔ 057	Auto program 8
				058 ⇔ 063	Auto program 9
				064 ⇔ 070	Auto program 10
				071 ⇔ 076	Auto program 11
				077 ⇔ 082	Auto program 12
				083 ⇔ 089	Auto program 13
				090 ⇔ 095	Auto program 14
				096 ⇔ 102	Auto program 15
				103 ⇔ 108	Auto program 16
				109 ⇔ 114	Auto program 17
				115 ⇔ 121	Auto program 18
				122 ⇔ 127	Auto program 19
				128 ⇔ 134	Auto program 20
				135 ⇔ 140	Auto program 21
				141 ⇔ 147	Auto program 22
				148 ⇔ 153	Auto program 23
				154 ⇔ 159	Auto program 24
				160 ⇔ 166	Auto program 25
				167 ⇔ 172	Auto program 26
				173 ⇔ 179	Auto program 27
				180 ⇔ 185	Auto program 28
				186 ⇔ 191	Auto program 29
				192 ⇔ 198	Auto program 30
				199 ⇔ 204	Auto program 31
				205 ⇔ 211	Auto program 32
				212 ⇔ 217	Auto program 33
				218 ⇔ 223	Auto program 34
				224 ⇔ 230	Auto program 35
				231 ⇔ 236	Auto program 36
				237 ⇔ 243	Auto program 37
				244 ⇔ 249	Auto program 38
				250 ⇔ 255	Auto program 39
8	–	5	**RGB program speed** (When **Ch. 7** or **4** are **006⇔ 255**)	**000 ⇔ 255**	RGB program speed, slow to fast
9	–	6	**Color macro** (When **Ch. 7** or **4** are **006⇔ 255**)	**000 ⇔ 005**	No function
				006 ⇔ 255	Mixed colors

18Ch	34Ch	47Ch	Function	Value	Percent/Setting
10	–	7	**Background color** (When **Ch. 7** or **4** are **006⇔ 255**)	**000 ⇔ 005**	No function
				006 ⇔ 255	mixed colors
11	–	8	**Background color dimmer**	**000 ⇔ 255**	100–0%
12	–	9	**White dimmer**	**000 ⇔ 001**	No function
				002 ⇔ 255	0–100%
13	–	10	**White strobe**	**000 ⇔ 005**	No function
				006 ⇔ 255	White strobe, slow to fast
14	–	11	**White program**	**000 ⇔ 005**	No function
				006 ⇔ 014	Auto program 1
				015 ⇔ 022	Auto program 2
				023 ⇔ 030	Auto program 3
				031 ⇔ 039	Auto program 4
				040 ⇔ 047	Auto program 5
				048 ⇔ 055	Auto program 6
				056 ⇔ 064	Auto program 7
				065 ⇔ 072	Auto program 8
				073 ⇔ 080	Auto program 9
				081 ⇔ 089	Auto program 10
				090 ⇔ 097	Auto program 11
				098 ⇔ 105	Auto program 12
				106 ⇔ 114	Auto program 13
				115 ⇔ 122	Auto program 14
				123 ⇔ 130	Auto program 15
				131 ⇔ 139	Auto program 16
				140 ⇔ 147	Auto program 17
				148 ⇔ 155	Auto program 18
				156 ⇔ 164	Auto program 19
				165 ⇔ 172	Auto program 20
				173 ⇔ 180	Auto program 21
				181 ⇔ 189	Auto program 22
				190 ⇔ 197	Auto program 23
				198 ⇔ 205	Auto program 24
				206 ⇔ 214	Auto program 25
				215 ⇔ 222	Auto program 26
				223 ⇔ 230	Auto program 27
				231 ⇔ 239	Auto program 28
				240 ⇔ 247	Auto program 29
				248 ⇔ 255	Auto Program 30
15	–	12	**White program speed** (When **Ch. 14** or **11** are **006⇔ 255**)	**000 ⇔ 255**	White program speed, slow to fast

18Ch	34Ch	47Ch	Function	Value	Percent/Setting
16	–	13	**RGBW program**	**000 ⇔ 005**	No function
				006 ⇔ 012	Auto program 1
				013 ⇔ 018	Auto program 2
				019 ⇔ 025	Auto program 3
				026 ⇔ 031	Auto program 4
				032 ⇔ 038	Auto program 5
				039 ⇔ 044	Auto program 6
				045 ⇔ 050	Auto program 7
				051 ⇔ 057	Auto program 8
				058 ⇔ 063	Auto program 9
				064 ⇔ 070	Auto program 10
				071 ⇔ 076	Auto program 11
				077 ⇔ 082	Auto program 12
				083 ⇔ 089	Auto program 13
				090 ⇔ 095	Auto program 14
				096 ⇔ 102	Auto program 15
				103 ⇔ 108	Auto program 16
				109 ⇔ 114	Auto program 17
				115 ⇔ 121	Auto program 18
				122 ⇔ 127	Auto program 19
				128 ⇔ 134	Auto program 20
				135 ⇔ 140	Auto program 21
				141 ⇔ 147	Auto program 22
				148 ⇔ 153	Auto program 23
				154 ⇔ 159	Auto program 24
				160 ⇔ 166	Auto program 25
				167 ⇔ 172	Auto program 26
				173 ⇔ 179	Auto program 27
				180 ⇔ 185	Auto program 28
				186 ⇔ 191	Auto program 29
				192 ⇔ 198	Auto program 30
				199 ⇔ 204	Auto program 31
				205 ⇔ 211	Auto program 32
				212 ⇔ 217	Auto program 33
				218 ⇔ 223	Auto program 34
				224 ⇔ 230	Auto program 35
				231 ⇔ 236	Auto program 36
				237 ⇔ 243	Auto program 37
				244 ⇔ 249	Auto program 38
				250 ⇔ 255	Auto program 39
17	–	14	**RGBW program speed** (When **Ch. 7, 16,** or **13** are **006⇔ 255**)	**000 ⇔ 255**	RGBW program speed, slow to fast
–	2	15	**Red 1**	**000 ⇔ 001**	No function
				002 ⇔ 255	0–100%
–	3	16	**Green 1**	**000 ⇔ 001**	No function
				002 ⇔ 255	0–100%

18Ch	34Ch	47Ch	Function	Value	Percent/Setting
–	4	17	Blue 1	000 ⇔ 001	No function
				002 ⇔ 255	0–100%
–	5	18	Red 2	000 ⇔ 001	No function
				002 ⇔ 255	0–100%
–	6	19	Green 2	000 ⇔ 001	No function
				002 ⇔ 255	0–100%
–	7	20	Blue 2	000 ⇔ 001	No function
				002 ⇔ 255	0–100%
–	8	21	Red 3	000 ⇔ 001	No function
				002 ⇔ 255	0–100%
–	9	22	Green 3	000 ⇔ 001	No function
				002 ⇔ 255	0–100%
–	10	23	Blue 3	000 ⇔ 001	No function
				002 ⇔ 255	0–100%
–	11	24	Red 4	000 ⇔ 001	No function
				002 ⇔ 255	0–100%
–	12	25	Green 4	000 ⇔ 001	No function
				002 ⇔ 255	0–100%
–	13	26	Blue 4	000 ⇔ 001	No function
				002 ⇔ 255	0–100%
–	14	27	Red 5	000 ⇔ 001	No function
				002 ⇔ 255	0–100%
–	15	28	Green 5	000 ⇔ 001	No function
				002 ⇔ 255	0–100%
–	16	29	Blue 5	000 ⇔ 001	No function
				002 ⇔ 255	0–100%
–	17	30	Red 6	000 ⇔ 001	No function
				002 ⇔ 255	0–100%
–	18	31	Green 6	000 ⇔ 001	No function
				002 ⇔ 255	0–100%
–	19	32	Blue 6	000 ⇔ 001	No function
				002 ⇔ 255	0–100%
–	20	33	Red 7	000 ⇔ 001	No function
				002 ⇔ 255	0–100%
–	21	34	Green 7	000 ⇔ 001	No function
				002 ⇔ 255	0–100%
–	22	35	Blue 7	000 ⇔ 001	No function
				002 ⇔ 255	0–100%
–	23	36	Red 8	000 ⇔ 001	No function
				002 ⇔ 255	0–100%
–	24	37	Green 8	000 ⇔ 001	No function
				002 ⇔ 255	0–100%
–	25	38	Blue 8	000 ⇔ 001	No function
				002 ⇔ 255	0–100%
–	26	39	White 1	000 ⇔ 005	No function
				006 ⇔ 255	0–100%

18Ch	34Ch	47Ch	Function	Value	Percent/Setting
–	27	40	White 2	000 ⇔ 005	No function
				006 ⇔ 255	0–100%
–	28	41	White 3	000 ⇔ 005	No function
				006 ⇔ 255	0–100%
–	29	42	White 4	000 ⇔ 005	No function
				006 ⇔ 255	0–100%
–	30	43	White 5	000 ⇔ 005	No function
				006 ⇔ 255	0–100%
–	31	44	White 6	000 ⇔ 005	No function
				006 ⇔ 255	0–100%
–	32	45	White 7	000 ⇔ 005	No function
				006 ⇔ 255	0–100%
–	33	46	White 8	000 ⇔ 005	No function
				006 ⇔ 255	0–100%
18	34	47	Mode	000 ⇔ 025	Dim Curve Off
				026 ⇔ 050	Dim Curve 1
				051 ⇔ 075	Dim Curve 2
				076 ⇔ 100	Dim Curve 3
				101 ⇔ 125	Dim set by unit display
				126 ⇔ 150	RESET Fixture
				155 ⇔ 255	No function

8Ch

Channel	Function	Value	Percent/Setting
1	Master dimmer	000 ⇔ 255	0–100%
2	RGB Strobe	000 ⇔ 005	No function
		006 ⇔ 255	RGB strobe, slow to fast
3	Red	000 ⇔ 255	0–100%
4	Green	000 ⇔ 255	0–100%
5	Blue	000 ⇔ 255	0–100%
6	White	000 ⇔ 001	No function
		002 ⇔ 255	0–100%

Channel	Function	Value	Percent/Setting
7	**RGBW program**	**000 ⇔ 005**	No function
		006 ⇔ 012	Auto program 1
		013 ⇔ 018	Auto program 2
		019 ⇔ 025	Auto program 3
		026 ⇔ 031	Auto program 4
		032 ⇔ 038	Auto program 5
		039 ⇔ 044	Auto program 6
		045 ⇔ 050	Auto program 7
		051 ⇔ 057	Auto program 8
		058 ⇔ 063	Auto program 9
		064 ⇔ 070	Auto program 10
		071 ⇔ 076	Auto program 11
		077 ⇔ 082	Auto program 12
		083 ⇔ 089	Auto program 13
		090 ⇔ 095	Auto program 14
		096 ⇔ 102	Auto program 15
		103 ⇔ 108	Auto program 16
		109 ⇔ 114	Auto program 17
		115 ⇔ 121	Auto program 18
		122 ⇔ 127	Auto program 19
		128 ⇔ 134	Auto program 20
		135 ⇔ 140	Auto program 21
		141 ⇔ 147	Auto program 22
		148 ⇔ 153	Auto program 23
		154 ⇔ 159	Auto program 24
		160 ⇔ 166	Auto program 25
		167 ⇔ 172	Auto program 26
		173 ⇔ 179	Auto program 27
		180 ⇔ 185	Auto program 28
		186 ⇔ 191	Auto program 29
		192 ⇔ 198	Auto program 30
		199 ⇔ 204	Auto program 31
		205 ⇔ 211	Auto program 32
		212 ⇔ 217	Auto program 33
		218 ⇔ 223	Auto program 34
		224 ⇔ 230	Auto program 35
		231 ⇔ 236	Auto program 36
		237 ⇔ 243	Auto program 37
		244 ⇔ 249	Auto program 38
		250 ⇔ 255	Auto program 39
8	**RGBW program speed** (When Ch. 7 is **006 ⇔ 255**)	**000 ⇔ 255**	RGBW program speed, slow to fast

Standalone Configuration

Set the product in one of the standalone modes to operate without a DMX controller.

Never connect a product that is operating in any standalone mode to a DMX string connected to a DMX controller. Products in standalone mode may transmit DMX signals that could interfere with the DMX signals from the controller.

Auto Show

To run the Shocker Panel FX IP in automatic mode:

1. Press **<MENU>** repeatedly until **Auto Show** shows on the display.
2. Press **<ENTER>**.
3. Use **<UP>** or **<DOWN>** to select the desired auto program from **Auto 1–41**.
4. Press **<ENTER>**.

Automatic Speed

To set the speed of the auto program, do the following:

1. Press **<MENU>** repeatedly until **Auto Speed** shows on the display.
2. Press **<ENTER>** twice.
3. Use **<UP>** or **<DOWN>** to increase or decrease the auto speed, from **000–099**.
4. Press **<ENTER>**.

Sound-Active Mode

To run the Shocker Panel FX IP with a sound-active program, follow the instructions below.

1. Press **<MENU>** repeatedly until **Sound Show** shows on the display.
2. Press **<ENTER>**.
3. Use **<UP>** or **<DOWN>** to select how the product will respond when sound is detected, from **Sound 1–41**.
4. Press **<ENTER>**.

Sound Sensitivity

To set the sound sensitivity of the product, do the following:

1. Press **<MENU>** repeatedly until **Sensitivity** shows on the display.
2. Press **<ENTER>** twice.
3. Use **<UP>** or **<DOWN>** to increase or decrease the sound sensitivity, from **000–100**.
4. Press **<ENTER>**.

The product will only respond to low frequencies of music (bass and drums).

Static Colors

To run the Shocker Panel FX IP with a custom static color, follow the instructions below.

1. Use **<UP>** or **<DOWN>** to select **Static Color**.
2. Press **<ENTER>**.
3. Press **<ENTER>** to select how the product will respond when sound is detected, from **Color 1–15**.
4. Press **<ENTER>**.

Custom Color Mixing

To run the Shocker Panel FX IP with a custom static color, follow the instructions below.

1. Use **<UP>** or **<DOWN>** to select **Manual Color**.
2. Press **<ENTER>** twice.
3. Use **<UP>** or **<DOWN>** to cycle through options, **Red**, **Green**, **Blue**, and **White**.
4. Press **<ENTER>**.
5. Use **<UP>** or **<DOWN>** to increase or decrease the selected value from **000–255**.
6. Repeat steps 3-5 until the product output is set as desired.

Dimmer

To adjust the dimmer, follow the instructions below:

1. Use **<UP>** or **<DOWN>** to select **Dimmer Mode.**
2. Press **<ENTER>** twice.
3. Use **<UP>** or **<DOWN>** to increase or decrease the dimmer, from **000–255**.
4. Press **<ENTER>**.

DMX Loss

To set the DMX Loss mode on the Shocker Panel FX IP:

1. Use **<UP>** or **<DOWN>** to select **DMX Loss**.
2. Press **<ENTER>**.
3. Use **<UP>** or **<DOWN>** to select how the product responds when no sound is detected, from **Hold** (holds the last setting), **Auto** (sets the unit to auto mode), **Sound** (sets the unit to sound mode), or **Blackout** (blacks out the product).
4. Press **<ENTER>**.

Fan Mode

To set the fan mode:

1. Use **<UP>** or **<DOWN>** to select **Fan Mode**.
2. Press **<ENTER>**.
3. Use **<UP>** or **<DOWN>** to select **Auto** (fan turns on automatically) or **On** (always on).
4. Press **<ENTER>**.

Lock Screen

To lock the screen on the Shocker Panel FX IP:

1. Use **<UP>** or **<DOWN>** to select **Lock Screen**.
2. Press **<ENTER>**.
3. Use **<UP>** or **<DOWN>** to select **Off** or **On**.
4. Press **<ENTER>**.

Back Light

To lock the screen on the Shocker Panel FX IP:

1. Use **<UP>** or **<DOWN>** to select **Back Light**.
2. Press **<ENTER>**.
3. Use **<UP>** or **<DOWN>** to select **On**, **10S**, **20S**, or **30S**.
4. Press **<ENTER>**.

System Information

To view the system information on the Shocker Panel FX IP:

1. Use **<UP>** or **<DOWN>** to select **Information**.
2. Press **<ENTER>.**

Factory Reset

To restore the Shocker Panel FX IP to factory default settings:

1. Use **<UP>** or **<DOWN>** to select **Factory Reset**.
2. Press **<ENTER>**.
3. Use **<UP>** or **<DOWN>** to select **No** or **Yes**.
4. Press **<ENTER>**.

System Update

To update the firmware on the Shocker Panel FX IP:

1. Use **<UP>** or **<DOWN>** to select **System Update**.
2. Press **<ENTER>.**
3. Use **<UP>** or **<DOWN>** to select **No** or **Yes**.

Wired Master/Slave Mode

The Master/Slave mode allows a single Shocker Panel FX IP product (the “master”) to control the actions of one or more Shocker Panel FX IP products (the “slaves”) without the need of a DMX controller. The master product will be set to operate in either standalone mode or with the IRC-6, while the slave products will be set to operate in slave mode. Once set and connected, the slave products will operate in unison with the master product.

Configure the products as indicated below.

Slave products:

1. Press **<MENU>** repeatedly until **8Ch** shows on the display.
2. Press **<ENTER>**.
3. Use **<UP>** or **<DOWN>** to set the starting address to **d001**.
4. Press **<ENTER>**.
5. Connect the DMX input of the first slave product to the DMX output of the master product.
6. Connect the DMX input of the subsequent slave products to the DMX output of the previous slave product.
7. Finish setting and connecting all the slave products.

Master product:

1. Set the master product to operate in standalone mode.
2. Make the master product the first product in the DMX daisy chain.

- **Configure all the slave products before connecting the master to the daisy chain.**
- **Never connect a DMX controller to a DMX string configured for Master/Slave operation because the controller may interfere with the signals from the master.**
- **Do not connect more than 31 slaves to the master.**

5. Maintenance

Product Maintenance

Dust build-up reduces light output performance and can cause overheating. This can lead to reduction of the light source's life and/or mechanical wear. To maintain optimum performance and minimize wear, clean all lighting products at least twice a month. However, be aware that usage and environmental conditions could be contributing factors to increase the cleaning frequency.

To clean the product, follow the instructions below:

1. Unplug the product from power.
2. Wait until the product is at room temperature.
3. Use a vacuum (or dry compressed air) and a soft brush to remove dust collected on the external surface/vents.
4. Clean all transparent surfaces with a mild soap solution, ammonia-free glass cleaner, or isopropyl alcohol.
5. Apply the solution directly to a soft, lint free cotton cloth or a lens cleaning tissue.
6. Softly drag any dirt or grime to the outside of the transparent surface.
7. Gently polish the transparent surfaces until they are free of haze and lint.

Do not spin the cooling fans using compressed air because they could be damaged.

6. Technical Specifications

Dimensions and Weight

Length	Width	Height	Weight
12.9 in (330 mm)	5.1 in (130 mm)	6.8 in (173 mm)	10.4 lb (4.7 kg)

Note: Dimensions in inches are rounded.

Power

Power Supply Type	Range	Voltage Selection
Switching (internal)	100 to 240 VAC, 50/60 Hz	Auto-ranging

Parameter	120 V, 60 Hz	230 V, 50 Hz
Consumption	238 W	231 W
Operating Current	2 A	1 A
Power linking current (products)	12 A (6 products)	12 A (11 products)

Power I/O	U.S./Worldwide	UK/Europe
Power input connector	True1	True1
Power output connector	True1	True1
Power cable plug	Edison (U.S.)	Local Plug

Light Source

Type	Color	Quantity	Power	Current	Lifespan
LED	Tricolor	480	2 W	1 A	50,000 hours
LED	Cool white	32	1.8 W	0.5 A	50,000 hours

Photometrics

Beam Angle	Field Angle	Illuminance @ 2 m	Lumens
119°	158°	1,131 lux	13,626 lux

Thermal

Maximum External Temperature	Cooling System
113 °F (45 °C)	Convection

DMX

I/O Connector	Channel Range
5-pin XLR	8, 18, 34, or 47

Ordering

Product Name	Item Code	UPC Number
Shocker Panel FX IP	07052727	781462230753

UL 1573
CSA C22.2 No. 166
E113093

RoHS

Contact Us

General Information	Technical Support
Chauvet World Headquarters	
Address: 3360 Davie Rd., Suite 509 Davie, FL 33314 Voice: (954) 577-4455 Fax: (954) 929-5560 Toll Free: (800) 762-1084	Voice: (844) 393-7575 Fax: (954) 756-8015 Email: chauvetcs@chauvetlighting.com Website: www.chauvetdj.com
Chauvet U.K.	
Address: Pod 1 EVO Park Little Oak Drive, Sherwood Park Nottinghamshire, NG15 0EB UK Voice: +44 (0) 1773 511115 Fax: +44 (0) 1773 511110	Email: UKtech@chauvetlighting.eu Website: www.chauvetdj.eu
Chauvet Benelux	
Address: Vaartlaan 9 9800 Deinze Belgium Voice: +32 9 388 93 97	Email: BNLtech@chauvetlighting.eu Website: www.chauvetdj.eu
Chauvet France	
Address: 3, Rue Ampère 91380 Chilly-Mazarin France Voice: +33 1 78 85 33 59	Email: FRtech@chauvetlighting.fr Website: www.chauvetdj.eu
Chauvet Germany	
Address: Bruno-Bürgel-Str. 11 28759 Bremen Germany Voice: +49 421 62 60 20	Email: DEtech@chauvetlighting.de Website: www.chauvetdj.eu
Chauvet Mexico	
Address: Av. de las Partidas 34 - 3B (Entrance by Calle 2) Zona Industrial Lerma Lerma, Edo. de México, CP 52000 Voice: +52 (728) 690-2010	Email: servicio@chauvet.com.mx Website: www.chauvetdj.mx

Warranty & Returns

For warranty terms and conditions and return information, please visit our website.
For customers in the United States and Mexico: www.chauvetlighting.com/warranty-registration.
For customers in the United Kingdom, Republic of Ireland, Belgium, the Netherlands, Luxembourg, France, and Germany: www.chauvetlighting.eu/warranty-registration.