INTIMIDATOR SPOT 360QD

User Manual

CHAUVET

Edition Notes

The Intimidator Spot 360QD User Manual includes a description, safety precautions, installation, programming, operation, and maintenance instructions for the Intimidator Spot 360QD as of the release date of this edition.

Trademarks

Chauvet, Chauvet DJ, the Chauvet logo, and Intimidator are registered trademarks or trademarks of Chauvet & Sons, LLC (d/b/a Chauvet and Chauvet Lighting) in the United States and other countries. Other company and product names and logos referred to herein may be trademarks of their respective companies.

Copyright Notice

The works of authorship contained in this manual, including, but not limited to, all designs, text, and images are owned by Chauvet.

© Copyright 2026 Chauvet & Sons, LLC. All rights reserved.

Electronically published by Chauvet in the United States of America.

Manual Use

Chauvet authorizes its customers to download and print this manual for professional information purposes only. Chauvet expressly prohibits the usage, copy, storage, distribution, modification, or printing of this manual or its content for any other purpose without written consent from Chauvet.

Document Printing

For best results, print this document in color, on letter size paper (8.5 x 11 in), double-sided. If using A4 paper (210 x 297 mm), configure the printer to scale the content accordingly.

Intended Audience

Any person installing, operating, and/or maintaining this product should completely read through the guide that shipped with the product, as well as this manual, before installing, operating, or maintaining this product.

Disclaimer

Chauvet believes that the information contained in this manual is accurate in all respects. However, Chauvet assumes no responsibility and specifically disclaims any and all liability to any party for any loss, damage, or disruption caused by any errors or omissions in this document, whether such errors or omissions result from negligence, accident, or any other cause. Chauvet reserves the right to revise the content of this document without any obligation to notify any person or company of such revision; however, Chauvet has no obligation to make, and does not commit to make, any such revisions.

Document Revision

Go to www.chauvetdj.com for the latest version.

Revision	Date	Description
3	10/2026	Added Illuminance @ 5 m specification.

TABLE OF CONTENTS

1. Before You Begin 1
- What Is Included 1
- Unpacking Instructions 1
- Claims 1
- Text Conventions 1
- Symbols 1
- Safety Notes 2
- FCC Statement of Compliance 3
- RF Exposure Warning for North America and Australia 3

2. Introduction 4
- Product Overview 4
- Product Dimensions 5

3. Setup 6
- AC Power 6
  - EU Version AC Plug 6
  - Fuse Replacement 6
  - Power Linking 6
- Mounting 7
  - Orientation 7
  - Rigging 7
- Gobo Wheel 8
  - Rotating Gobo Dimensions 8
  - Gobo Replacement 9
    - Procedure 9
    - Gobo Replacement Diagrams 9

4. Operation 10
- Control Panel Operation 10
- Menu Map 10
- DMX Configuration 12
  - Starting Address 12
  - DMX Personalities 12
- DMX Channel Assignments and Values 13
  - DMX Charts 13
- Standalone Configuration 15
  - Auto Mode 15
  - Sound-Active Mode 15
    - Sound Sensitivity 15
  - Manual Mode 16
    - Crossfade 16
    - Hold Time 16
    - Programming Steps 16
    - Clearing and Deleting Steps 16
- Settings Configuration 17
  - D-Fi Mode 17
  - D-Fi Channel 17
  - Pan Reverse 17
  - Tilt Reverse 17

Pan Angle 17
Tilt Angle 18
Totem Mode 18
Blackout on Pan/Tilt movement 18
Display Time-Out 18
Screen Reverse 18
DMX Loss 19
Indicator 19
Flash if DMX 19
Firmware Update 19
Reset Function 19
Factory Reset 20
System Information 20
Master/Slave Mode 20
Wired Master/Slave 20
RFC Remote Control 21
RFC Remote Binding 21
RFC Control Options 21
RFC Remote Control Operation 22
RFC-XL Remote Control Operation 23
5. Maintenance 24
Product Maintenance 24
Gobo Maintenance 24
6. Technical Specifications 25
Contact Us 26
Warranty & Returns 26

1. Before You Begin

What Is Included

- Intimidator Spot 360QD
- Power cable
- powerCON to bare end cable (EU only)
- Hanging brackets
- Quick Reference Guide

Unpacking Instructions

Carefully unpack the product immediately and check the container to make sure all the parts are in the package and are in good condition.

Claims

If the box or the contents (the product and included accessories) appear damaged from shipping, or show signs of mishandling, notify the carrier immediately, not Chauvet. Failure to report damage to the carrier immediately may invalidate a claim. In addition, keep the box and contents for inspection.

For other issues, such as missing components or parts, damage not related to shipping, or concealed damage, file a claim with Chauvet within 7 days of delivery.

Text Conventions

Convention	Meaning
1–512	A range of values
50/60	A set of values of which only one can be chosen
Settings	A menu option not to be modified
<ENTER>	A key to be pressed on the product's control panel
ON	A value to be entered or selected

Symbols

Symbol	Meaning
	Electrical warning. Not following these instructions may cause electrical damage to the product, accessories, or the user.
	Critical installation, configuration, or operation information. Not following these instructions may make the product not work, cause damage to the product, or cause harm to the operator.
	Important installation or configuration information. The product may not function correctly if this information is not used.
	Useful information.

Safety Notes

These Safety Notes include important information about installation, use, and maintenance of the Intimidator Spot 360QD.

- **ALWAYS:**
  - Connect to a grounded circuit.
  - Connect to operating voltages as specified on the product's spec sticker.
  - Disconnect from power before replacing the fuse.
  - Disconnect from its power source during periods of inactivity.
  - Use a safety cable when suspending overhead.
  - Heed all restrictions and warnings on the spec sticker.
  - Mount in a location with at least 20 in (50 cm) of ventilation.
  - Replace the fuse with the same type and rating.
- In the event of a serious operating problem, stop using immediately.
- **DO NOT:**
  - Open this product or attempt any repairs. It contains no user-serviceable parts.
  - Look at the light source when the product is on.
  - Use if the power cable is crimped or damaged.
  - Disconnect by pulling on the power cable.
  - Allow flammable materials close to the product when it is operating.
  - Touch the housing when it is on.
  - Block any ventilation holes/slots in the housing.
  - Connect to a dimmer or rheostat.
  - Carry the product by its power cable.
  - Operate in temperatures higher than 104°F (40°C).
  - Expose to environments that exceed the Ingress Protection (IP) rating.
  - Expose to rain or moisture.
  - Use outdoors.
  - Submerge.

Keep this User Manual for future use. If the product is sold to someone else, be sure that they also receive this document.

FCC Statement of Compliance

This device complies with Part 15 Part B of the FCC rules. Operation is subject to the following two conditions:

1. This device may not cause harmful interference, and
2. This device must accept any interference received, including interference that may cause undesired operation.

This equipment has been tested and found to comply with the limits for a Class B digital device, pursuant to Part 15 of the FCC Rules. These limits are designed to provide reasonable protection against harmful interference in a residential installation. This equipment generates uses and can radiate radio frequency energy and, if not installed and used in accordance with the instructions, may cause harmful interference to radio communications. However, there is no guarantee that interference will not occur in a particular installation. If this equipment does cause harmful interference to radio or television reception, which can be determined by turning the equipment off and on, the user is encouraged to try to correct the interference by one or more of the following measures:

- Reorient or relocate the receiving antenna.
- Increase the separation between the equipment and receiver.
- Connect the equipment into an outlet on a circuit different from that to which the receiver is connected.
- Consult the dealer or an experienced radio/TV technician for help.

Any changes or modifications not expressly approved by the party responsible for compliance could void the user’s authority to operate the equipment.

RF Exposure Warning for North America and Australia

Warning! This equipment complies with FCC radiation exposure limits set forth for an uncontrolled environment. This equipment should be installed and operated with a minimum distance of 20 cm between the radiator and the user. This transmitter must not be co-located or operating in conjunction with any other antenna or transmitter.

2. Introduction

Product Overview

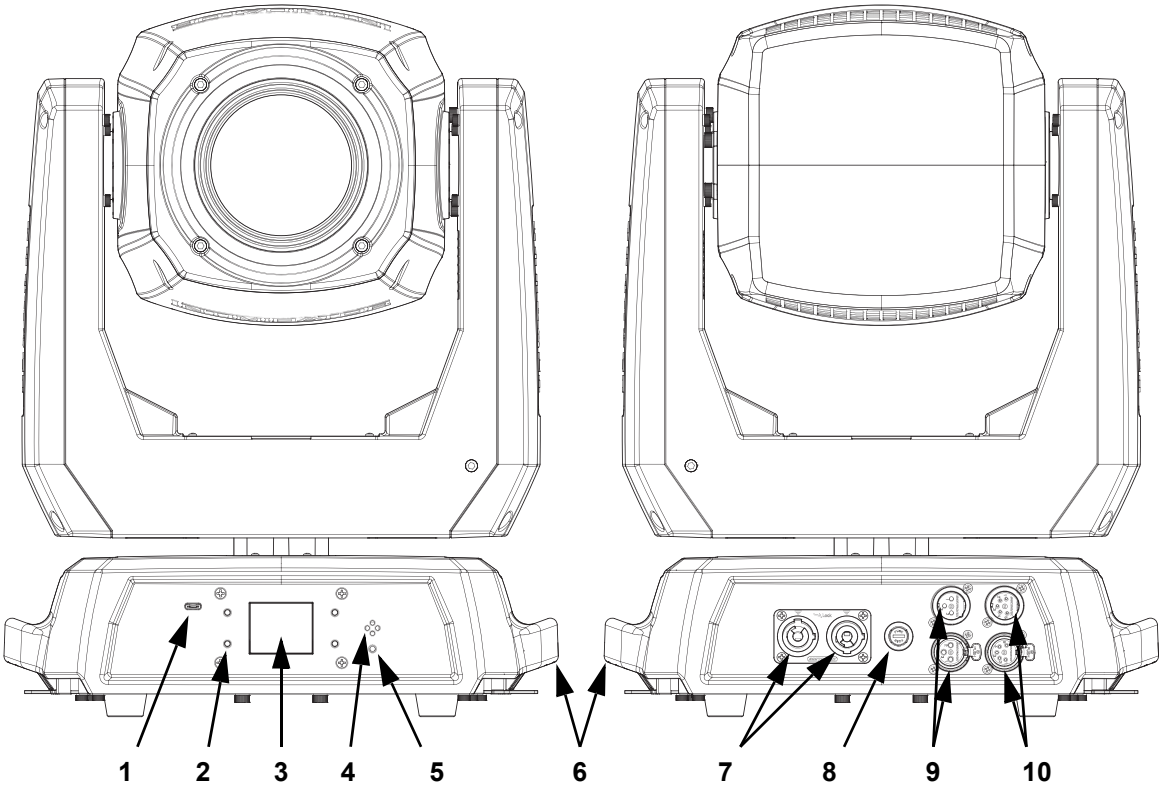

#	Name	#	Name
1	USB type C port	**6**	Carry handles
2	Menu buttons	**7**	Power in/out
3	Menu display	**8**	Fuse holder
4	Microphone	**9**	3-pin DMX in/out
5	LED indicator	**10**	5-pin DMX in/out

WARNING! DO NOT plug anything other than a data connection into the USB type C port. Doing so may cause damage to the product.

Product Dimensions

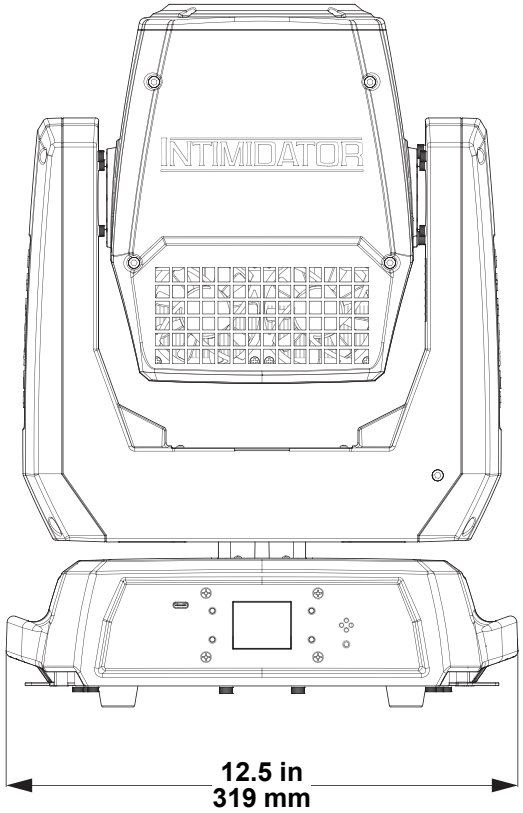

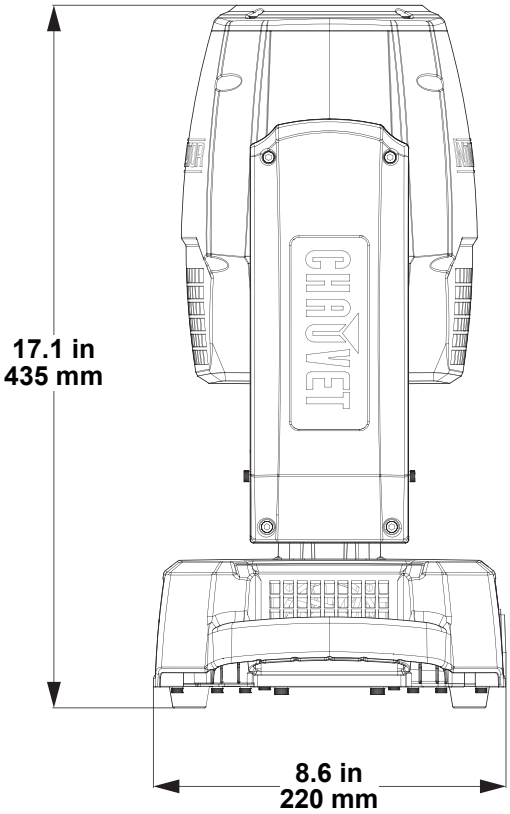

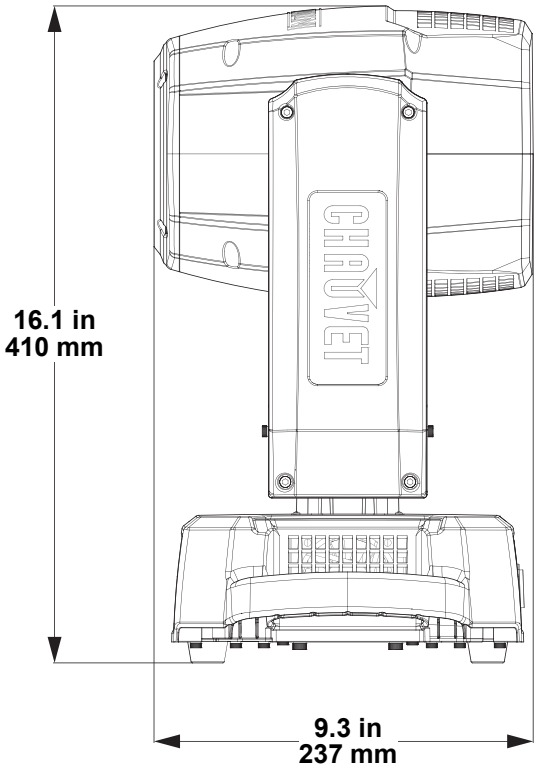

3. Setup

AC Power

The Intimidator Spot 360QD has an auto-ranging power supply and it can work with an input voltage range of 100 to 240 VAC, 50/60 Hz.

To determine the product's power requirements (circuit breaker, power outlet, and wiring), use the current value listed on the label affixed to the product's back panel, or refer to the product's specifications chart. The listed current rating indicates the product's average current draw under normal conditions.

- **Always connect the product to a protected circuit (a circuit breaker or fuse). Make sure the product has an appropriate electrical ground to avoid the risk of electrocution or fire.**
- **To eliminate unnecessary wear and improve its lifespan, during periods of non-use completely disconnect the product from power via breaker or by unplugging it.**

Never connect the product to a rheostat (variable resistor) or dimmer circuit, even if the rheostat or dimmer channel serves only as a 0 to 100% switch.

EU Version AC Plug

The EU version of this product comes with a power input cable terminated with a powerCON connector on one end and bare wire on the other end. Use the table below to wire a plug.

Connection	Wire (U.S.)	Wire (Europe)	Screw Color
AC Live	Black	Brown	Yellow/Brass
AC Neutral	White	Blue	Silver
AC Ground	Green/Yellow	Green/Yellow	Green/Silver

Fuse Replacement

1. Disconnect the product from power.
2. Using a Phillips-head screwdriver, unscrew the fuse holder and pull it straight out.
3. Remove the blown fuse from the holder and replace with a fuse of the exact same type and rating.
4. Re-insert the fuse holder and reconnect power.

Disconnect the product from the power outlet before replacing the fuse.

Always replace a blown fuse with one of the same type and rating.

Power Linking

This product provides power linking via the outlet located in the back of the product. See the diagram below for further explanation.

Power Linking Diagram

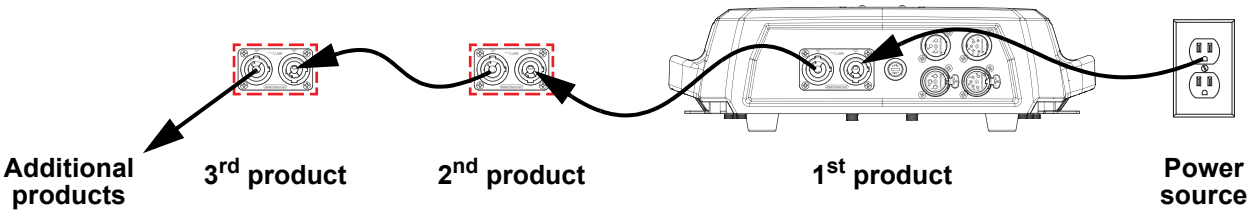

It is possible to link up to 4 Intimidator Spot 360QD products on 120 VAC or up to 8 products on 230 VAC.

The power linking diagram shown above corresponds to the North American version of the product ONLY! If using the product in other markets, consult with the local Chauvet distributor as power linking connectors and requirements may differ by country or region.

Mounting

Before mounting the product, read and follow the safety recommendations indicated in the Safety Notes.

Orientation

The Intimidator Spot 360QD may be mounted in any position; however, make sure adequate ventilation is provided around the product.

Rigging

- Before deciding on a location for the product, always make sure there is easy access to the product for maintenance and programming.
- Make sure that the structure and attachment points can support the weight before hanging the product (see the Technical Specifications section for weight information).
- When mounting the product overhead, always use a safety cable. Mount the product securely to a rigging point, such as an elevated platform or a truss.
- When rigging the product onto a truss, use a mounting clamp of appropriate weight capacity. The bracket has a 13-mm hole, which is appropriate for this purpose.
- When power linking multiple products, mount the products close enough for power linking cables to reach.
- When mounting the product on the floor, make sure that the product and cables are away from people and vehicles.

Mounting Diagram

Overhead mounting

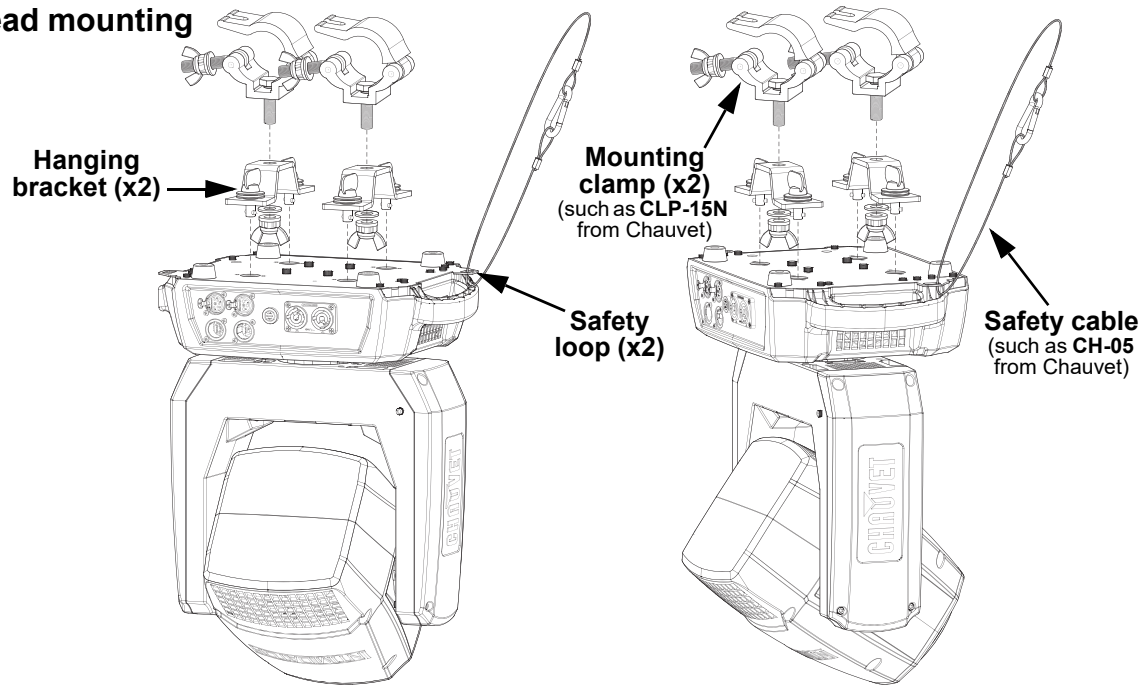

Surface mounting

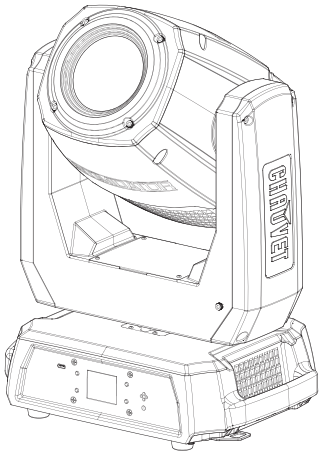

Gobo Wheel

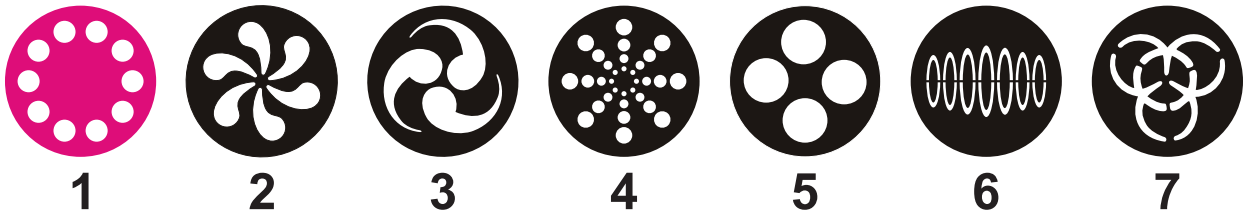

Rotating Gobo Dimensions

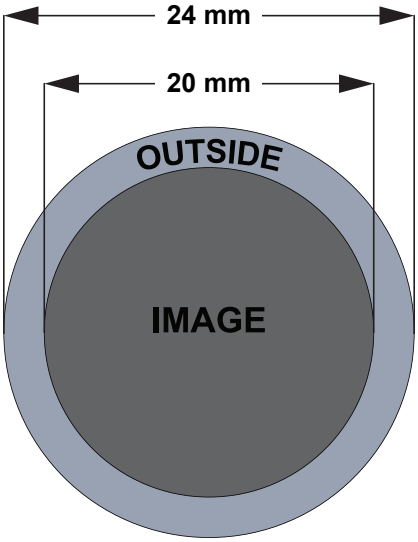

Gobo Replacement

The gobos in the Intimidator Spot 360QD are removable from their gobo holders.

- **Make sure to disconnect the product's power cable before replacing a gobo.**
- **Always replace a gobo with a gobo of the same dimensions.**
- **When inserting a glass gobo, always make sure that the shiny side of the gobo (glass base) faces the lamp. This provides a layer of protection against the high temperature from the lamp.**
- **All custom gobos in the Intimidator Spot 360QD gobo wheel must be aluminum or glass.**

Procedure

Follow the recommended procedure below to remove or replace the gobos:

1. Turn the product off and disconnect it from the power outlet.
2. Open the head cover by loosening the 4 Phillips-head ¼-turn screws on the sides of the top cover.
3. Separate the gobo holder away from the gobo wheel by pushing it toward the front of the moving head (see direction 1 in the diagram). Be careful not to push the gobo out of the gobo holder.
4. Extract the gobo holder by pulling it outward (see direction 2 in the diagram).
5. On a flat surface, remove the expansion ring that holds the gobo in place and remove the gobo from the gobo holder.
6. Insert a new gobo and hold it in place with the expansion ring.
7. Slide the tip of the gobo holder under the pressure plate near the center of the gobo wheel.
8. Push the gobo holder inwards. DO NOT force the gobo holder into the gobo wheel slot. If correctly installed, the gobo plate should easily slide itself into the gobo wheel slot.

Gobo Replacement Diagrams

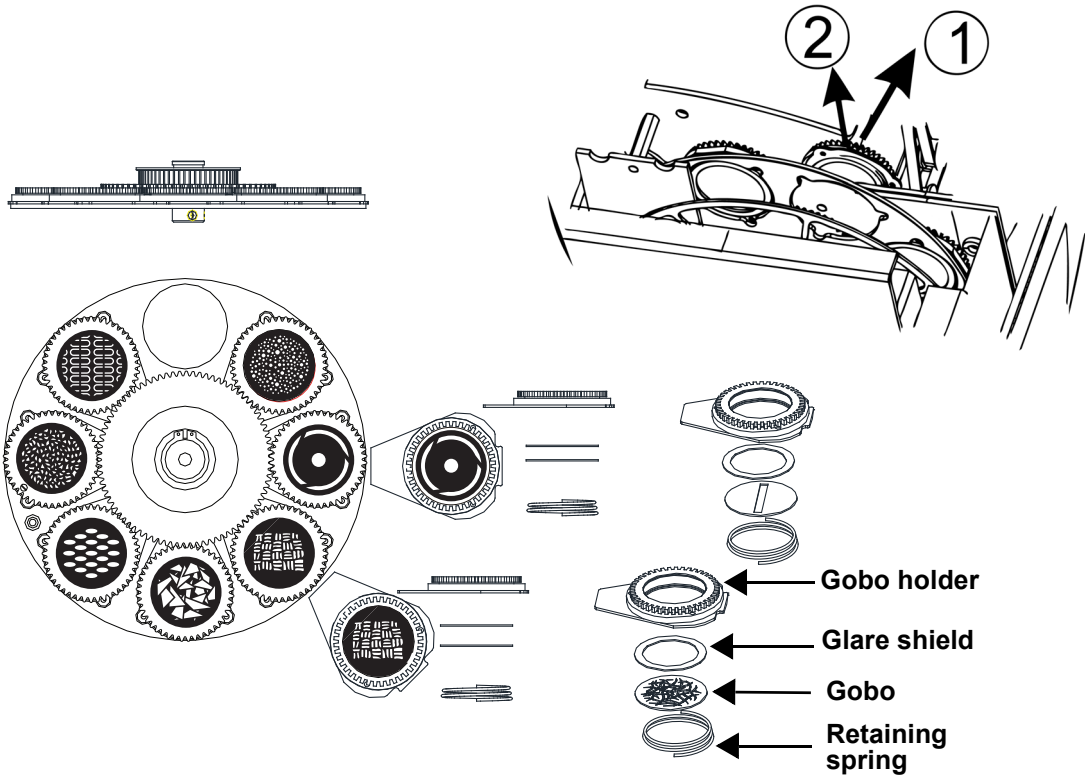

- **Gobo illustrations are for reference purposes only. Gobo designs may differ from those installed in the product.**
- **Gobo holder 1 is slightly smaller to accommodate glass gobos.**
- **See Gobo Maintenance for instructions on how to clean the gobos and gobo holder.**

4. Operation

Control Panel Operation

To access the control panel functions, use the four buttons located underneath the display. Please refer to the Product Overview to see the button locations on the control panel.

Button	Name	Function
	<MENU>	Exits from the current menu or function
	<UP>	Navigates upwards through the menu list and increases the numeric value when in a function
	<DOWN>	Navigates downwards through the menu list and decreases the numeric value when in a function
	<ENTER>	Enables the currently displayed menu or sets the currently selected value into the selected function

Menu Map

Refer to the Intimidator Spot 360QD product page on www.chauvetdj.com for the latest menu map and software.

Main Level	Programming Levels				Description
Address	**001–502**				Sets the DMX starting address
Run Mode	**DMX**	**18CH**			Selects DMX mode
		11CH			
	Slave	**Slave1–4**			Selects Slave mode 1, 2, 3, or 4
	Auto				Selects Auto mode
	Sound				Selects Sound-Active mode
	RF	**RFP**			Sets the product to work with public RF signal
		RF 1–4			Sets the product to work with the RFC-XL remote in group 1, 2, 3, or 4 (RF remote must be bound to the product first)
	Manual	**Crossfade (sec)**		**0000–1200**	Sets the time between playback in sec.
		Hold time (sec)		**0000–1200**	Sets the speed of playback in seconds
		Step 1 / **Step 2**	**Clear**	**NO**	Resets all step 1 manual values to 0
				YES	
			Delete	**NO**	Removes step 1 from playback
				YES	
			Pan	**000–255**	Manual pan control
			Tilt		Manual tilt control
			P/T Speed		Manual pan/tilt speed control
			Red		Manual red control
			Green		Manual green control
			Blue		Manual blue control
			Lime		Manual lime control
			Color		Manual color macro control
			Gobo		Manual gobo control
			Gobo Rotate		Manual gobo rotation control
			Prism		Manual prism control
			Focus		Manual focus control
			Dimmer		Manual dimmer control
			Strobe		Manual strobe control

Main Level	Programming Levels				Description
Setup	DFI			OFF	Sets the DFI mode
				RX	
				TX	
	DFI Channel			1–16	Sets the DFI channel
	Pan Reverse			OFF	Normal pan operation
				ON	Reverse pan operation
	Tilt Reverse			OFF	Normal tilt operation
				ON	Reverse tilt operation
	Pan Angle			540	Selects the 540° pan angle range
				360	Selects the 360° pan angle range
				180	Selects the 180° pan angle range
	Tilt Angle			270	Selects the 270° tilt angle range
				180	Selects the 180° tilt angle range
				90	Selects the 90° tilt angle range
	Totem Mode			OFF	Does not restrict the pan and tilt motion
				UP	Restricts the pan and tilt motion for overhead mounting
				DOWN	Restricts the pan and tilt motion for surface/floor mounting
	BL. O. P/T Move			OFF	Enables/Disables Black Out On product Movement
				ON	
	Display			OFF	Display turns off after 30 sec.
				ON	Display stays on
	Screen Rev			NO	Normal display
				YES	Reverse display
	Sensitivity			001–100	Sets sound sensitivity
	DMX Loss			Hold	Holds the last setting when signal is lost
				Black	Blackout when signal is lost
				Auto	Auto mode when signal is lost
				Sound	Sound mode when signal is lost
	Indicator			ON	Enables/disables LED indicator
				OFF	
	Flash if DMX			ON	Indicator flashes when connected to DMX
				OFF	Indicator flashes when not connected to DMX
	RF			BIND	Shows instructions on how to bind the RF remote to the product
	USB Update	Update Me	...	NO	Selects software to update through USB-C
			...		
			...	YES	
		Update Other	...	NO	
			...		
			...	YES	
	Reset Function			NO	Resets the product
				YES	
	Factory Set			NO	Loads factory defaults
				YES	

Main Level	Programming Levels		Description
Sys Info	**Ver:**	**V1.1**	Displays the firmware version
	Running Mode:	**_ _ _ _ _**	Displays the current running mode
	DMX Address:	**_ _ _**	Displays the current DMX address
	Temperature:	**_ _ _**	Displays the current product temperature
	Fixture Time:	**_ _ _ _**	Shows number of hours product has been powered on
	UID	**_ _ _ _ _ _**	Shows product UID
	MH431 DFan1:	**_ _ _ _**	Displays base fan information
	MH431 DFan2:	**_ _ _ _**	Displays LED fan information
	DFI Fre:	**000/100**	Displays connected DFI information

DMX Configuration

The Intimidator Spot 360QD works with a DMX controller. Information about DMX is in the Chauvet DMX Primer, available from the Chauvet website chauvetlighting.com/downloads/DMX_Primer_rev05_WO.pdf.

Starting Address

The Intimidator Spot 360QD uses up to 18 DMX channels, which defines the highest configurable address to **495** in **18CH** mode.

When selecting a starting DMX address, always consider the number of DMX channels the DMX mode uses. If the starting address is set too high, access to some channels could be restricted.

For information about the DMX protocol, download the DMX Primer from www.chauvetdj.com.

To select the starting address, do the following:

1. Press **<MENU>**.
2. Use **<UP>** or **<DOWN>** to select **Address**.
3. Press **<ENTER>**.
4. Use **<UP>** or **<DOWN>** to select the starting address, from **001–502**.
5. Press **<ENTER>**.

DMX Personalities

The Intimidator Spot 360QD has **2** DMX personalities, an 18-channel personality, and an 11-channel personality.

To select which DMX personality to use, follow the steps below:

1. Press **<MENU>**.
2. Use **<UP>** or **<DOWN>** to select **Run Mode**.
3. Press **<ENTER>**.
4. Use **<UP>** or **<DOWN>** to select **DMX**.
5. Press **<ENTER>**.
6. Use **<UP>** or **<DOWN>** to select the DMX personality, from **18CH** or **11CH**.
7. Press **<ENTER>**.

DMX Channel Assignments and Values

DMX Charts

11	18	Function	Value	Percent/Setting
1	1	Pan	000 ⇔ 255	0–100%
–	2	Fine pan	000 ⇔ 255	0–100%, 16-bit
2	3	Tilt	000 ⇔ 255	0–100%
–	4	Fine tilt	000 ⇔ 255	0–100%, 16-bit
–	5	Pan/tilt speed	000 ⇔ 255	Fast to slow
3	6	Red	000 ⇔ 255	0–100%
4	7	Green	000 ⇔ 255	0–100%
5	8	Blue	000 ⇔ 255	0–100%
6	9	Lime	000 ⇔ 255	0–100%
–	10	Color macro	000	No function
			001	Blue
			002 ⇔ 040	+Green
			041	Cyan
			042 ⇔ 080	-Blue
			081	Green
			082 ⇔ 120	+Red
			121	Yellow
			122 ⇔ 160	-Green
			161	Red
			162 ⇔ 200	+Blue
			201	Magenta
			202 ⇔ 238	-Red
			239	Blue
			240 ⇔ 247	Color fade, fast to slow
			248 ⇔ 255	Color snap, fast to slow
7	11	Gobo wheel	000 ⇔ 007	Open
			008 ⇔ 015	Gobo 1
			016 ⇔ 023	Gobo 2
			024 ⇔ 031	Gobo 3
			032 ⇔ 039	Gobo 4
			040 ⇔ 047	Gobo 5
			048 ⇔ 055	Gobo 6
			056 ⇔ 063	Gobo 7
			064 ⇔ 071	Gobo 7 shaking, slow to fast
			072 ⇔ 079	Gobo 6 shaking, slow to fast
			080 ⇔ 087	Gobo 5 shaking, slow to fast
			088 ⇔ 095	Gobo 4 shaking, slow to fast
			096 ⇔ 103	Gobo 3 shaking, slow to fast
			104 ⇔ 111	Gobo 2 shaking, slow to fast
			112 ⇔ 119	Gobo 1 shaking, slow to fast
			120 ⇔ 127	Open
			128 ⇔ 189	Gobo scroll, slow to fast
			190 ⇔ 193	Stop
			194 ⇔ 255	Reverse gobo scroll, slow to fast

11	18	Function	Value	Percent/Setting
8	12	Gobo rotate	000 ⇔ 064	Gobo indexing
			065 ⇔ 145	Gobo rotate, slow to fast
			146 ⇔ 149	Stop
			150 ⇔ 231	Reverse gobo rotate, slow to fast
			232 ⇔ 255	Gobo bounce, slow to fast
9	13	Prism	000 ⇔ 003	No function
			004 ⇔ 006	Prism 1
			007 ⇔ 065	Prism 1 rotate, slow to fast
			066 ⇔ 123	Prism 1 reverse rotate, slow to fast
			124 ⇔ 127	Prism 1
			128 ⇔ 131	No function
			132 ⇔ 134	Prism 2
			135 ⇔ 193	Prism 2 rotate, slow to fast
			194 ⇔ 251	Prism 2 reverse rotate, slow to fast
			252 ⇔ 255	Prism 2
10	14	Focus	000 ⇔ 255	0–100%
–	15	Dimmer	000 ⇔ 255	0–100%
11	16	Strobe	000 ⇔ 003	Off
			004 ⇔ 007	On
			008 ⇔ 076	Strobe, slow to fast
			077 ⇔ 145	Pulse strobe, slow to fast
			146 ⇔ 215	Random strobe, slow to fast
			216 ⇔ 255	On
–	17	Control	000 ⇔ 007	No function
			008 ⇔ 015	Black out on pan/tilt
			016 ⇔ 023	No function
			024 ⇔ 031	Black out on gobo movement
			032 ⇔ 047	No function
			048 ⇔ 055	Black out on pan, tilt, and gobo movement
			056 ⇔ 095	No function
			096 ⇔ 103	Reset pan
			104 ⇔ 111	Reset tilt
			112 ⇔ 119	No function
			120 ⇔ 127	Reset gobo
			128 ⇔ 135	No function
			136 ⇔ 143	Reset prism
			144 ⇔ 151	No function
			152 ⇔ 159	Reset all
			160 ⇔ 255	No function

11	18	Function	Value	Percent/Setting
–	18	Program / movement macro	**000 ⇔ 007**	No function
			008 ⇔ 023	Movement macro 1
			024 ⇔ 039	Movement macro 2
			040 ⇔ 055	Movement macro 3
			056 ⇔ 071	Movement macro 4
			072 ⇔ 087	Movement macro 5
			088 ⇔ 103	Movement macro 6
			104 ⇔ 119	Movement macro 7
			120 ⇔ 135	Movement macro 8
			136 ⇔ 255	Sound-active movement macro

Standalone Configuration

Set the product in one of the standalone modes to operate without a DMX controller.

Never connect a product that is operating in any standalone mode to a DMX string connected to a DMX controller. Products in standalone mode may transmit DMX signals that could interfere with the DMX signals from the controller.

Auto Mode

To run the Intimidator Spot 360QD with an automatic program, follow the instructions below:

1. Press **<MENU>** repeatedly until **Run Mode** shows on the display.
2. Press **<ENTER>**.
3. Use **<UP>** or **<DOWN>** to select **Auto**.
4. Press **<ENTER>**.

Sound-Active Mode

To run the Intimidator Spot 360QD with a sound-active program, follow the instructions below.

1. Press **<MENU>** repeatedly until **Run Mode** shows on the display.
2. Press **<ENTER>**.
3. Use **<UP>** or **<DOWN>** to select **Sound**.
4. Press **<ENTER>**.

Sound Sensitivity

To set the sound sensitivity of the product, do the following:

1. Press **<MENU>** repeatedly until **Setup** shows on the display.
2. Press **<ENTER>**.
3. Use **<UP>** or **<DOWN>** to select **Sensitivity**.
4. Press **<ENTER>**.
5. Use **<UP>** or **<DOWN>** to increase or decrease the sound sensitivity, from **001–100**.
6. Press **<ENTER>**.

The product will only respond to low frequencies of music (bass and drums).

Manual Mode

To run the Intimidator Spot 360QD in Manual mode:

1. Press **<MENU>**.
2. Use **<UP>** or **<DOWN>** to select **Run Mode**.
3. Press **<ENTER>**.
4. Use **<UP>** or **<DOWN>** to select **Manual**.
5. Press **<ENTER>**.

Crossfade

To set the number of seconds it takes to transition between steps:

1. Go to the **Manual Mode** menu.
2. Use **<UP>** or **<DOWN>** to select **Crossfade (sec)**.
3. Press **<ENTER>**.
4. Use **<UP>** or **<DOWN>** to increase or decrease the duration, from **0000–1200**.
5. Press **<ENTER>**.

Hold Time

To set the number of seconds each step runs before switching steps:

1. Go to the **Manual Mode** menu.
2. Use **<UP>** or **<DOWN>** to select **Hold time (sec)**.
3. Press **<ENTER>**.
4. Use **<UP>** or **<DOWN>** to increase or decrease the duration, from **0000–1200**.
5. Press **<ENTER>**.

Programming Steps

To program **Step 1** or **Step 2**:

1. Go to the **Manual Mode** menu.
2. Use **<UP>** or **<DOWN>** to select **Step 1** or **Step2**.
3. Press **<ENTER>**.
4. Use **<UP>** or **<DOWN>** to select from **Pan**, **Tilt**, **P/T Speed**, **Red**, **Green**, **Blue**, **Lime**, **Color**, **Gobo**, **Gobo Rotate**, **Prism**, **Focus**, **Dimmer**, or **Strobe**.
5. Press **<ENTER>**.
6. Use **<UP>** or **<DOWN>** to increase or decrease the value of the selected function, from **000–255**.
7. Press **<ENTER>**.
8. Repeat steps 4-7 until the product is set as desired.

Clearing and Deleting Steps

To clear or delete **Step 1** or **Step 2:**

1. Go to the **Manual Mode** menu.
2. Use **<UP>** or **<DOWN>** to select from **Clear** or **Delete**.
3. Press **<ENTER>**.
4. Use **<UP>** or **<DOWN>** to select **NO** or **YES**.
5. Press **<ENTER>**.

- **Selecting Clear will reset all Manual options to <000>.**
- **Selecting Delete will reset all Manual options to <000> and prevent the step from playback.**

Settings Configuration

D-Fi Mode

This product has a built-in D-Fi transceiver. To set the Intimidator Spot 360QD to receive a D-Fi control signal or to transmit a D-Fi control signal to other products:

1. Press **<MENU>**.
2. Use **<UP>** or **<DOWN>** to select **Setup.**
3. Press **<ENTER>**.
4. Use **<UP>** or **<DOWN>** to select **DFI**.
5. Press **<ENTER>**.
6. Use **<UP>** or **<DOWN>** to select the D-Fi mode, from **OFF** (deactivates D-Fi), **RX** (receiver) or **TX** (transmitter).
7. Press **<ENTER>**.

D-Fi Channel

To set the D-Fi channel for the Intimidator Spot 360QD to receive or transmit:

1. Press **<MENU>**.
2. Use **<UP>** or **<DOWN>** to select **Setup.**
3. Press **<ENTER>**.
4. Use **<UP>** or **<DOWN>** to select **DFI Channel**.
5. Press **<ENTER>**.
6. Use **<UP>** or **<DOWN>** to set the channel from **1–16**.
7. Press **<ENTER>**.

Pan Reverse

To set the pan orientation on the Intimidator Spot 360QD:

1. Press **<MENU>**.
2. Use **<UP>** or **<DOWN>** to select **Setup.**
3. Press **<ENTER>**.
4. Use **<UP>** or **<DOWN>** to select **Pan Reverse**.
5. Press **<ENTER>**.
6. Use **<UP>** or **<DOWN>** to select **OFF** (normal pan orientation) or **ON** (reverse pan orientation).
7. Press **<ENTER>**.

Tilt Reverse

To set the tilt orientation on the Intimidator Spot 360QD:

1. Press **<MENU>**.
2. Use **<UP>** or **<DOWN>** to select **Setup.**
3. Press **<ENTER>**.
4. Use **<UP>** or **<DOWN>** to select **Tilt Reverse**.
5. Press **<ENTER>**.
6. Use **<UP>** or **<DOWN>** to select **OFF** (normal tilt orientation) or **ON** (reverse tilt orientation).
7. Press **<ENTER>**.

Pan Angle

To set the pan angle range on the Intimidator Spot 360QD:

1. Press **<MENU>**.
2. Use **<UP>** or **<DOWN>** to select **Setup.**
3. Press **<ENTER>**.
4. Use **<UP>** or **<DOWN>** to select **Pan Angle**.
5. Press **<ENTER>**.
6. Use **<UP>** or **<DOWN>** to select from **540** (540°), **360** (360°), or **180** (180°).
7. Press **<ENTER>**.

Tilt Angle

To set the tilt angle range on the Intimidator Spot 360QD:

1. Press **<MENU>**.
2. Use **<UP>** or **<DOWN>** to select **Setup.**
3. Press **<ENTER>**.
4. Use **<UP>** or **<DOWN>** to select **Tilt Angle**.
5. Press **<ENTER>**.
6. Use **<UP>** or **<DOWN>** to select from **270** (270°), **180** (180°), or **90** (90°).
7. Press **<ENTER>**.

Totem Mode

To activate the totem mode on the Intimidator Spot 360QD:

1. Press **<MENU>**.
2. Use **<UP>** or **<DOWN>** to select **Setup.**
3. Press **<ENTER>**.
4. Use **<UP>** or **<DOWN>** to select **Totem Mode**.
5. Press **<ENTER>**.
6. Use **<UP>** or **<DOWN>** to select from **OFF** (normal range of motion), **UP** (restricts the pan and tilt motion for overhead mounting), or **DOWN** (restricts the pan and tilt motion for surface/floor mounting).
7. Press **<ENTER>**.

Blackout on Pan/Tilt movement

To set the product to black out while panning or tilting:

1. Use **<UP>** or **<DOWN>** to select **Setup.**
2. Press **<ENTER>**.
3. Use **<UP>** or **<DOWN>** to select **BL. O. P/T Move**.
4. Press **<ENTER>**.
5. Use **<UP>** or **<DOWN>** to select **NO** or **YES**.

Display Time-Out

To set whether to display turns off after 30 seconds of inactivity or stays on:

1. Press **<MENU>**.
2. Use **<UP>** or **<DOWN>** to select **Setup.**
3. Press **<ENTER>**.
4. Use **<UP>** or **<DOWN>** to select **Display**.
5. Press **<ENTER>**.
6. Use **<UP>** or **<DOWN>** to select **OFF** (turns off after 30 seconds) or **ON** (stays on).
7. Press **<ENTER>**.

Screen Reverse

To invert the display:

1. Press **<MENU>**.
2. Use **<UP>** or **<DOWN>** to select **Setup.**
3. Press **<ENTER>**.
4. Use **<UP>** or **<DOWN>** to select **Screen Rev**.
5. Press **<ENTER>**.
6. Use **<UP>** or **<DOWN>** to select **NO** (upright display) or **YES** (inverted display).
7. Press **<ENTER>**.

DMX Loss

To set the action that the Intimidator Spot 360QD will do when signal is lost:

1. Press **<MENU>**.
2. Use **<UP>** or **<DOWN>** to select **Setup.**
3. Press **<ENTER>**.
4. Use **<UP>** or **<DOWN>** to select **DMX Loss**.
5. Press **<ENTER>**.
6. Use **<UP>** or **<DOWN>** to select from **Hold** (holds the last setting), **Black** (blacks out the product), **Auto** (sets the unit to auto mode), or **Sound** (sets the unit to sound mode)**.**
7. Press **<ENTER>**.

Indicator

To enable or disable the LED indicator:

1. Press **<MENU>**.
2. Use **<UP>** or **<DOWN>** to select **Setup.**
3. Press **<ENTER>**.
4. Use **<UP>** or **<DOWN>** to select **Indicator**.
5. Press **<ENTER>**.
6. Use **<UP>** or **<DOWN>** to select **OFF** (disabled) or **ON** (enabled).
7. Press **<ENTER>**.

Flash if DMX

To set when the LED indicator flashes in regards to DMX:

1. Press **<MENU>**.
2. Use **<UP>** or **<DOWN>** to select **Setup.**
3. Press **<ENTER>**.
4. Use **<UP>** or **<DOWN>** to select **Flash if DMX**.
5. Press **<ENTER>**.
6. Use **<UP>** or **<DOWN>** to select **OFF** (disabled) or **ON** (enabled).
7. Press **<ENTER>**.

Firmware Update

To update the product to the latest factory version:

1. Press **<MENU>**.
2. Use **<UP>** or **<DOWN>** to select **Setup.**
3. Press **<ENTER>**.
4. Use **<UP>** or **<DOWN>** to select **USB Update**.
5. Press **<ENTER>**.
6. Use **<UP>** or **<DOWN>** to select **Update Me** (enables update for this fixture) or **Update Other** (enables update for other connected fixtures).
7. Press **<ENTER>**.
8. Select the fixture to update.
9. Press **<ENTER>**.
10. Select the software version.
11. Press **<ENTER>**.
12. Select **NO** (to cancel) or **YES** (to update).

Reset Function

To restart the Intimidator Spot 360QD:

1. Press **<MENU>**.
2. Use **<UP>** or **<DOWN>** to select **Setup.**
3. Press **<ENTER>**.
4. Use **<UP>** or **<DOWN>** to select **Reset Function**.
5. Press **<ENTER>**.
6. Use **<UP>** or **<DOWN>** to select **NO** (does not restart) or **YES** (restarts the product).
7. Press **<ENTER>**.

Factory Reset

To reset the Intimidator Spot 360QD to factory default settings:

1. Press **<MENU>**.
2. Use **<UP>** or **<DOWN>** to select **Setup.**
3. Press **<ENTER>**.
4. Use **<UP>** or **<DOWN>** to select **Factory Reset**.
5. Press **<ENTER>**.
6. Use **<UP>** or **<DOWN>** to select **NO** (does not reset) or **YES** (resets to factory defaults).
7. Press **<ENTER>**.

System Information

To view the firmware version, running mode, DMX address, temperature, time the product has been powered on, UID number, fan speeds, and D-Fi frequency of the product:

1. Press **<MENU>**.
2. Use **<UP>** or **<DOWN>** to select **Sys Info**.
3. Press **<ENTER>**, then use **<UP>** or **<DOWN>** to view all information.

Master/Slave Mode

The Master/Slave mode allows a single Intimidator Spot 360QD product (the “master”) to control the actions of one or more Intimidator Spot 360QD products (the “slaves”) without the need of a DMX controller. The master product will be set to operate in standalone mode, while the slave products will be set to operate in slave mode. Once set and connected, the slave products will operate in unison with the master product.

Configure the products as indicated below.

Wired Master/Slave

Slave products:

1. Press **<MENU>**.
2. Use **<UP>** or **<DOWN>** to select **Run Mode**.
3. Press **<ENTER>**.
4. Use **<UP>** or **<DOWN>** to select **Slave**.
5. Press **<ENTER>**.
6. Use **<UP>** or **<DOWN>** to select from **Slave1**, **Slave2**, **Slave3**, or **Slave4**.
   - Select **Slave1** for 100% synchronized actions.
   - Select **Slave2**, **Slave3**, and/or **Slave4** for delayed actions, creating a wave effect.
7. Press **<ENTER>**.
8. For a wired connection:
   a. Connect the DMX input of the first slave product to the DMX output of the master product.
   b. Connect the DMX input of the subsequent slave products to the DMX output of the previous slave product.

   For a D-Fi connection:
   a. Set the D-Fi Mode to **RX**.
   b. Select a D-Fi Channel from **1–16**.
9. Finish setting and connecting all the slave products.

Master product:

1. Set the master product to operate in standalone mode.
2. For a wired connection: make the master product the first product in the DMX daisy chain.

   For a D-Fi connection:
   a. Set the D-Fi Mode to **TX**.
   b. Set the D-Fi Channel to the channel the slaves are receiving on.

- **Configure all the slave products before connecting the master to the daisy chain or setting the master to transmit.**
- **Never connect a DMX controller to a DMX string or D-Fi channel configured for Master/Slave operation because the controller may interfere with the signals from the master.**
- **All products must be set to the same DMX personality, DMX address, and D-Fi channel if using D-Fi.**
- **Do not connect more than 31 slaves to the master with DMX cables.**
- **For more information on how to activate the built-in D-Fi of the Intimidator Spot 360QD, see D-Fi Mode.**

RFC Remote Control

The Intimidator Spot 360QD can be operated with an RFC remote or an RFC-XL remote (sold separately).

For more information about using an RFC or RFC-XL remote, download the user manuals from www.chauvetdj.com

RFC Remote Binding

To enable RF control, the product must bind to the RFC/RFC-XL. To bind the Intimidator Spot 360QD to an RFC/RFC-XL, follow the instructions below:

1. Use **<UP>** or **<DOWN>** to select **Setup**.
2. Press **<ENTER>**.
3. Use **<UP>** or **<DOWN>** to select **RF**.
4. Press **<ENTER>**.
5. **Bind** will show on the display. Press **<ENTER>**.
6. Press and hold **<BLACK OUT>** on the RFC/RFC-XL until it blinks to link the fixture to that RF remote.

RFC Control Options

The RFC-XL can control multiple products at once, whether in defined groups or in public mode. To set the Intimidator Spot 360QD to public RFC/RFC-XL control or to an RFC-XL group:

1. Use **<UP>** or **<DOWN>** to select **Run Mode**.
2. Press **<ENTER>**.
3. Use **<UP>** or **<DOWN>** to select **RF**.
4. Press **<ENTER>**.
5. Use **<UP>** or **<DOWN>** to select to control mode, from **RFP** (public mode) or **RF 1–4** (group 1–4).
6. Press **<ENTER>**.

RFC Remote Control Operation

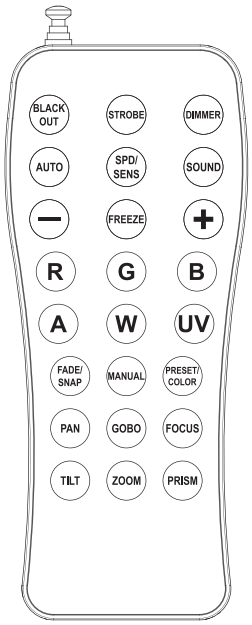

RFC	Button	Function
	<BLACK OUT>	Press to turn off all lights until the button is pressed again
	<STROBE>	Press then use **<+>** or **<->** to increase or decrease strobe speed **00**: no function **01–13**: strobe, slow to fast **14–20**: pulse strobe, slow to fast
	<DIMMER>	Press then use **<+>** or **<->** to increase or decrease the dimmer
	<AUTO>	Press to activate automatic mode, then use **<+>** or **<->** to select a program
	<SPD/SENS>	Press then use **<+>** or **<->** to increase or decrease speed or sensitivity
	<SOUND>	Press to activate sound-active mode
	<–>	Press to decrease speed, sensitivity, or the dimmer/color value, or to scroll down the list of programs
	<+>	Press to increase speed, sensitivity, or the dimmer/color value, or to scroll up the list of programs
	<FREEZE>	Press to stop all movement and color chasing
	<R>	Press then use **<+>** or **<->** to increase or decrease the red value
	<G>	Press then use **<+>** or **<->** to increase or decrease the green value
	<B>	Press then use **<+>** or **<->** to increase or decrease the blue value
	<A>	Press to toggle an amber color
	<W>	Press then use **<+>** or **<->** to increase or decrease the lime value
	<UV>	Press to toggle a UV-like color
	<FADE/SNAP>	No function
	<MANUAL>	Press to activate manual mode
	<PRESET/ COLOR>	Press to activate color macros, then use **<+>** or **<->** to select a color
	<PAN>	Press then use **<+>** or **<->** to increase or decrease the pan value
	<GOBO>	Press to cycle gobos and gobo scroll
	<FOCUS>	Press then use **<+>** or **<->** to increase or decrease the focus value
	<TILT>	Press then use **<+>** or **<->** to increase or decrease the tilt value
	<ZOOM>	Press to activate an auto gobo/color program
	<PRISM>	Press then use **<+>** or **<->** to select a prism

The RFC remote will not respond to any inputs when Freeze or Black Out is activated. If the remote does not respond when a button is pressed, try pressing <FREEZE> or <BLACK OUT>. Freeze or Black Out may have been inadvertently activated.

RFC-XL Remote Control Operation

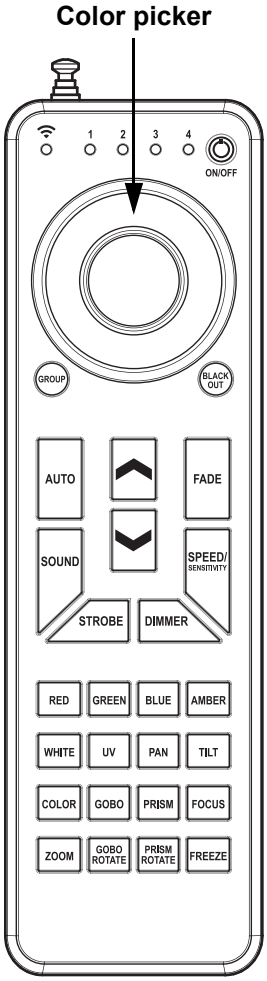

RFC	Button	Function
	<ON/OFF>	Press to power the RFC-XL on or off
	Color picker	Use to select a color (does not correspond to colors printed on remote)
	<GROUP>	Press to cycle between groups 1–4 and public mode
	<BLACK OUT>	Press to turn off all lights until the button is pressed again
	<AUTO>	Press to activate automatic mode, then use **<^>** or **<v>** to select a program
	<FADE>	No function
	<SOUND>	Press to activate sound-active mode
	<SPEED/ SENSITIVITY>	Press then use **<^>** or **<v>** to increase or decrease speed or sensitivity
	<^>	Press to increase the selected value, or to scroll up the list of options
	<v>	Press to decrease the selected value, or to scroll down the list of options
	<STROBE>	Press to toggle strobe, then use **<^>** or **<v>** to increase or decrease strobe speed **00**: no function **01–13**: strobe, slow to fast **14–20**: pulse strobe, slow to fast
	<DIMMER>	Press then use **<^>** or **<v>** to increase or decrease the dimmer
	<RED>	Press then use **<^>** or **<v>** to increase or decrease the red value
	<GREEN>	Press then use **<^>** or **<v>** to increase or decrease the green value
	<BLUE>	Press then use **<^>** or **<v>** to increase or decrease the blue value
	<AMBER>	Press to toggle an amber color
	<WHITE>	Press then use **<^>** or **<v>** to increase or decrease the lime value
	<UV>	Press to toggle a UV-like color
	<PAN>	Press to activate manual pan/tilt, then use **<^>** or **<v>** to increase or decrease the pan value
	<TILT>	Press to activate manual pan/tilt, then use **<^>** or **<v>** to increase or decrease the tilt value
	<COLOR>	Press to activate color macros, then use **<^>** or **<v>** to select a color
	<GOBO>	Press to cycle gobos and gobo scroll
	<PRISM>	Press then use **<^>** or **<v>** to increase or decrease the prism value
	<FOCUS>	Press then use **<^>** or **<v>** to increase or decrease the focus value
	<ZOOM>	Press to activate or deactivate an auto gobo/color program
	<GOBO ROTATE>	Press then use **<^>** or **<v>** to increase or decrease the gobo rotation value
	<PRISM ROTATE>	Press to activate gobo scroll, then use **<^>** or **<v>** to increase or decrease the speed Press again to toggle scroll direction
	<FREEZE>	Press to stop all movement and color chasing

The RFC-XL remote will not respond to any inputs when Black Out is activated. If the remote does not respond when a button is pressed, try pressing <BLACK OUT>. You may have inadvertently activated Black Out.

5. Maintenance

Product Maintenance

Dust build-up reduces light output performance and can cause overheating. This can lead to reduction of the light source's life and/or mechanical wear. To maintain optimum performance and minimize wear, clean all lighting products at least twice a month. However, be aware that usage and environmental conditions could be contributing factors to increase the cleaning frequency.

To clean the product, follow the instructions below:

1. Unplug the product from power.
2. Wait until the product is at room temperature.
3. Use a vacuum (or dry compressed air) and a soft brush to remove dust collected on the external surface/vents.
4. Clean all transparent surfaces with a mild soap solution, ammonia-free glass cleaner, or isopropyl alcohol.
5. Apply the solution directly to a soft, lint free cotton cloth or a lens cleaning tissue.
6. Softly drag any dirt or grime to the outside of the transparent surface.
7. Gently polish the transparent surfaces until they are free of haze and lint.

Always dry the transparent surfaces carefully after cleaning them.

Do not spin the cooling fans using compressed air because they could be damaged.

Gobo Maintenance

To ensure optimal operation, 1) inspect and 2) clean gobos every four months. More frequent maintenance may be necessary if usage is higher.

To inspect, remove each gobo holder and check if:

- the holders are clean (free of dirt, grime, or gunk).
- the gobos are properly installed in the holders.
- all the bearings are in place.
- the holders are rotating freely.

To clean the gobos and the gobo holder, follow the instructions below:

1. Remove the gobos from the holder.
2. Clean the gobos with a soft, lint-free cotton cloth. Use an ammonia-free glass cleaner sprayed to a piece of lint-free cotton cloth to clean glass gobos.
3. Submerge the gobo holder (without the gobo installed) in a container with a liquid lubricant (i.e., WD40) and let it rest for a couple of minutes.
4. Shake the container with the gobo holder inside to help release/loosen any gunk/grime/dirt.
5. Take the gobo holder out of the container and clean it using a small nylon brush.
6. Wipe off all the lubricant from the gobo holder using a piece of lint-free cotton cloth.
7. Apply a small coat of synthetic oil (i.e., Liquid Bearings) to the bearings and rotate it thoroughly in both directions (needle tip applier recommended). Make sure the gobo holder is rotating freely and is not making any abnormal noise.
8. Reinstall the gobos in the gobo holder. Make sure the gobos are in the correct positions.
9. Reinstall the gobo holder in the unit.

6. Technical Specifications

Dimensions and Weight

Length	Width	Height	Weight
12.5 in (319 mm)	8.6 in (220 mm)	17.1 in (435 mm)	20.4 lb (9.2 kg)

Note: Dimensions in inches are rounded.

Power

Power Supply Type	Range	Voltage Selection
Switching (internal)	100 to 240 VAC, 50/60 Hz	Auto-ranging

Parameter	120 V, 60 Hz	230 V, 50 Hz
Consumption	339 W	336 W
Operating Current	2.8 A	1.4 A
Power linking current (products)	12 A (4 products)	12 A (8 products)
Fuse	F 5 A, 250 V	F 5 A, 250 V

Power I/O	U.S./Worldwide	UK/Europe
Power input connector	powerCON-compatible	powerCON-compatible
Power output connector	powerCON-compatible	powerCON-compatible
Power cable plug	Edison (U.S.)	Bare end

Light Source

Type	Color	Quantity	Power	Current	Lifespan
LED	Quad-color RGBL	1	220 W	2.5 A	50,000 hours

Photometrics

Strobe Rate	Beam Angle	Illuminance @ 2 m	Illuminance @ 5 m	Lumens
0 to 25 Hz	17°	17,242 lux	2,759 lux	4,474

Thermal

Maximum External Temperature	Cooling System
104 °F (40 °C)	Fan-assisted convection

DMX

I/O Connector	Channel Range
3- and 5-pin XLR	11 or 18

Ordering

Product Name	Item Code	UPC Number
Intimidator Spot 360QD	08012794	781462231422

UL 1573
CSA C22.2 No. 166
E113093

Contact Us

General Information	Technical Support
Chauvet World Headquarters	
Address: 3360 Davie Rd., Suite 509 Davie, FL 33314 Voice: (954) 577-4455 Fax: (954) 929-5560 Toll Free: (800) 762-1084	Voice: (844) 393-7575 Fax: (954) 756-8015 Email: chauvetcs@chauvetlighting.com Website: www.chauvetdj.com
Chauvet U.K.	
Address: Pod 1 EVO Park Little Oak Drive, Sherwood Park Nottinghamshire, NG15 0EB UK Voice: +44 (0) 1773 511115 Fax: +44 (0) 1773 511110	Email: UKtech@chauvetlighting.eu Website: www.chauvetdj.eu
Chauvet Benelux	
Address: Vaartlaan 9 9800 Deinze Belgium Voice: +32 9 388 93 97	Email: BNLtech@chauvetlighting.eu Website: www.chauvetdj.eu
Chauvet France	
Address: 3, Rue Ampère 91380 Chilly-Mazarin France Voice: +33 1 78 85 33 59	Email: FRtech@chauvetlighting.fr Website: www.chauvetdj.eu
Chauvet Germany	
Address: Bruno-Bürgel-Str. 11 28759 Bremen Germany Voice: +49 421 62 60 20	Email: DEtech@chauvetlighting.de Website: www.chauvetdj.eu
Chauvet Mexico	
Address: Av. de las Partidas 34 - 3B (Entrance by Calle 2) Zona Industrial Lerma Lerma, Edo. de México, CP 52000 Voice: +52 (728) 690-2010	Email: servicio@chauvet.com.mx Website: www.chauvetdj.mx

Warranty & Returns

For warranty terms and conditions and return information, please visit our website.
For customers in the United States and Mexico: www.chauvetlighting.com/warranty-registration.
For customers in the United Kingdom, Republic of Ireland, Belgium, the Netherlands, Luxembourg, France, and Germany: www.chauvetlighting.eu/warranty-registration.